POWER WHEELS
by Fisher-Price®

Product features may vary from the picture above.

Jeep® Wrangler

Owner's Manual with Assembly Instructions

Please read this manual and save it with your original sales receipt.

For Model 78538

Tools needed for assembly: Phillips Screwdriver, Hammer, and Safety Scissors.

Use only with Power Wheels® Type H 6 Volt (9.5 Amp./hr. - included or 12 Amp./hr. - not included) Batteries, Power Wheels® 30 Amp Fuses (included) and Power Wheels® Type H 12 Volt Charger (included).

⚠ CAUTION

ELECTRIC TOY: Not recommended for children under 3 years of age. As with all electric products, precautions should be observed during handling and use to prevent electric shock.

Table of Contents

A Important Information 2
B Warnings 3
C Parts 4
D Parts Diagram 6
E Battery Charging 8
F Assembly 10
G Label Decoration 17
H Battery Installation 18
I Battery Care and Disposal 19
J Rules for Safe Driving 20
K How to Operate Your Vehicle 21
L Caring for Your Vehicle 22
M Problems and Solutions Guide 23
N Statement of Limited Warranty 27
O Authorized Service Centers 27

A Important Information

- Your new vehicle requires adult assembly. Please set aside at least 45 minutes for assembly.
- You must charge your batteries for 18 - 30 hours **before you use your vehicle for the first time.** We recommend that you start charging your batteries before beginning assembly. Please see Battery Charging beginning on page 8 for detailed instructions.
- Read this manual carefully for important safety information and operating instructions before using your vehicle.
- This vehicle is designed for use on grass, asphalt or other hard surfaces, on hills or flat terrain, by children 3 years of age and older.
- This vehicle has adjustable play seat belts. Please note that the adjustable seat belts are designed to be a play feature only and do not function as protective safety restraints.
- To prevent damaging the motors and gears, do not tow anything behind the vehicle or overload it. Do not exceed the maximum weight capacity of 130 lbs.
- For safety reasons, your vehicle has been pre-set so that it will only operate at low speed. **You must disconnect the high speed lock-out to allow operation of the vehicle at high speed.** Please see page 22 for detailed instructions.
- If you have any questions about your Power Wheels® vehicle, please call our toll-free service lines at **1-800-348-0751** from 8 AM to 6 PM (EST) Monday through Friday. Trained customer service representatives are available to take your call in English or French. Habla Español? Si usted tiene alguna pregunta ó necesita asistencia llame gratis **1-800-348-0755** para los Estados Unidos. Tenemos representantes que hablan español para atender su llamada.
- For your convenience, Power Wheels® maintains an Authorized Service Center Network with more than 400 authorized service centers nationwide. Our authorized service centers will repair or replace parts under warranty at no extra charge, and can perform non-warranty repairs for a minimal charge. Please see the Authorized Service Center list beginning on page 27 to find the authorized service center nearest you, or call **1-800-348-0751**.
- Please complete and return the enclosed Registration Card today, or call **1-800-348-0751** to register your vehicle by phone.

⚠ CAUTION

Use the charger indoors only.

B Warnings

⚠ WARNING

- Children can be harmed by small parts, sharp edges and sharp points in the vehicle's unassembled state, or by electrical items. Care should be taken in unpacking and assembly of the vehicle. Children should not handle parts, including the batteries, or help in assembly of the vehicle.
- Keep small parts and plastic bags out of children's reach. Dispose of plastic bags properly.
- Adult supervision is required. Children do not have the judgement necessary to avoid many accidents. Be sure that children operating this vehicle can do so safely and that they are supervised at all times.
- Never use near steps, driveways, steep inclines, roadways, alleys, swimming pool areas or other bodies of water.
- Always wear shoes or sneakers when operating this vehicle.
- Never allow more than two riders; one driver and one passenger.
- The riders should sit on the seat when the vehicle is in operation.
- **Hot** motors. Handle carefully.
- Never alter this vehicle or its electrical system in any way. Alterations could cause a fire resulting in injury and could also ruin the electrical system.
- Use of the wrong type batteries, fuses or charger could cause a fire or explosion, resulting in serious injury.
- Use of Power Wheels® components in products other than Power Wheels® vehicles could cause overheating, fire or explosion.
- The batteries must be handled by adults only. The batteries are heavy and contain sulfuric acid (electrolyte). Dropping the batteries could result in serious injury.
- Never lift or carry the batteries by the wires or connectors. This can damage the batteries and possibly cause a fire resulting in injury. Lift and carry the batteries by the cases only.
- Read the cautions on the back panels of the batteries.
- Never allow children to charge the batteries. Battery charging must be done by adults only. A child could be injured by the electricity involved in charging the batteries.
- Examine the batteries, charger and their connectors for excessive wear or damage each time you charge the batteries. If damage or excessive wear is detected, do not use the vehicle until you have replaced the worn or damaged part as it could possibly cause a fire resulting in injury.

C Parts

- If you experience a problem with this product, or are missing a part, please call us at **1-800-348-0751,** rather than return this product to the store.
- Please identify all parts before assembly and save all packaging material until assembly is complete to ensure that no parts are discarded.
- Metal parts have been coated with a lubricant to protect them during shipment. Wipe all metal parts with a paper towel to remove any excess lubricant.

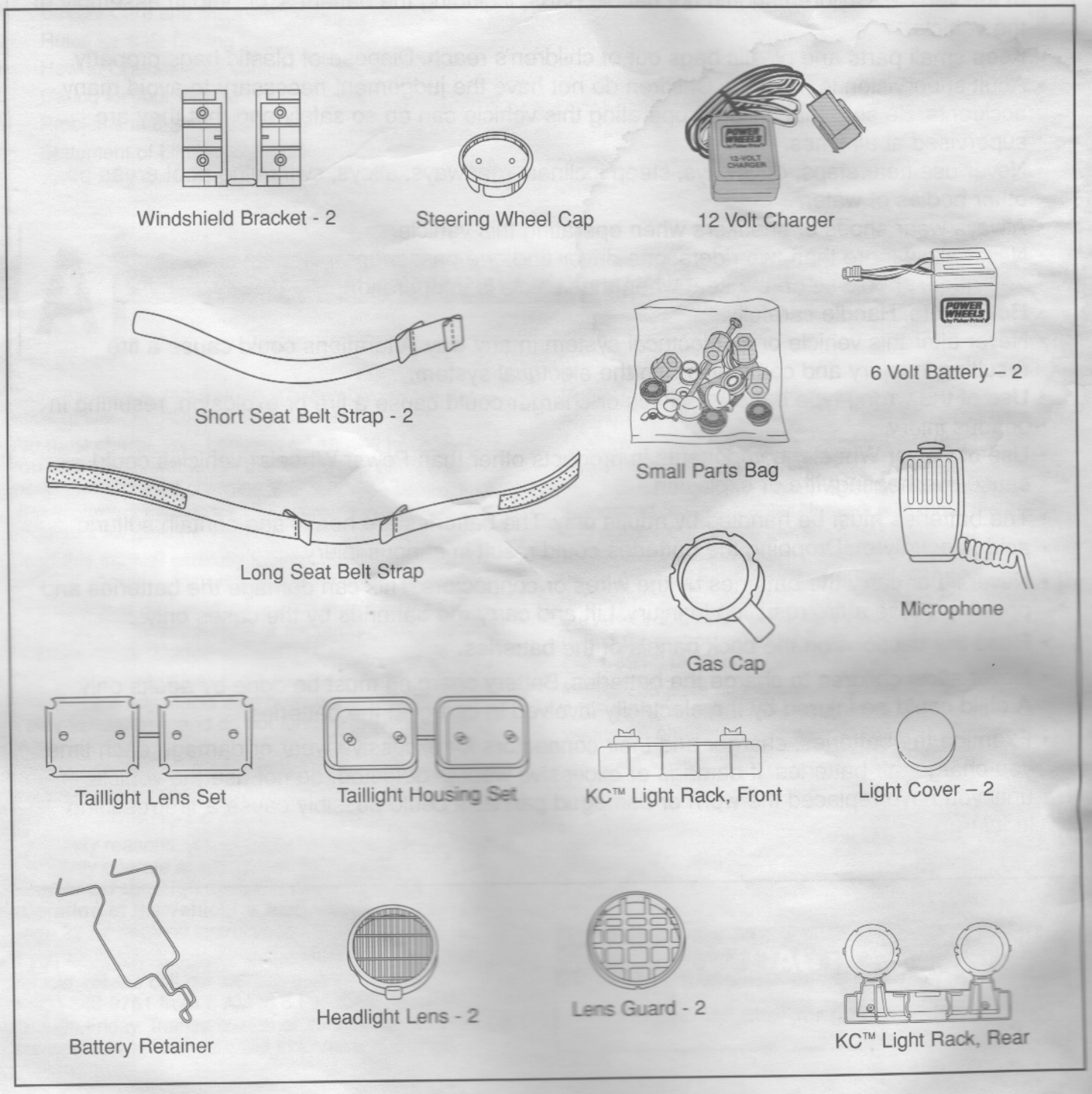

Parts

Hood Latch – 2

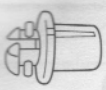
Dashboard Knob – 2

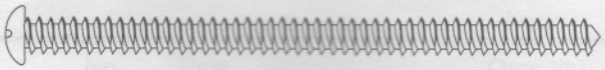
#10 x 3" Screw – 2

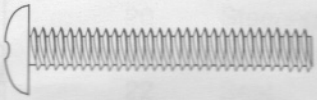
1½" x ¼" Machine Screw - 2

#8 x 1" Screw – 11

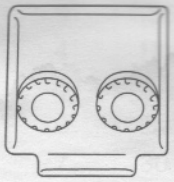
Knob Plate

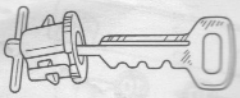
Key Assembly

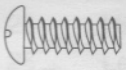
#10 x ½" Screw – 2

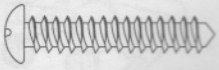
#10 x 1" Screw – 2

30 Amp Fuse – 3*

#6 x 1½" Screw – 4

.354 Cap Nut – 3*

*For your convenience, an extra 30 amp fuse and .354 cap nut have been included.

All Screws Shown Actual Size

Windshield

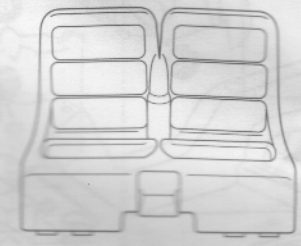
Seat

Vehicle Body

Dash

Steering Column

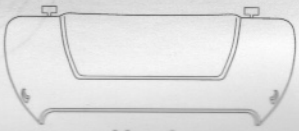
Hood

Steering Wheel

Sport Bar

Sport Bar Support - 2

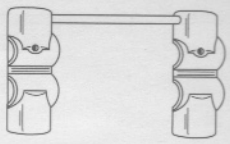
Sport Bar Bracket Set

Not Shown: Label Sheet, Literature Bag

D Parts Diagram

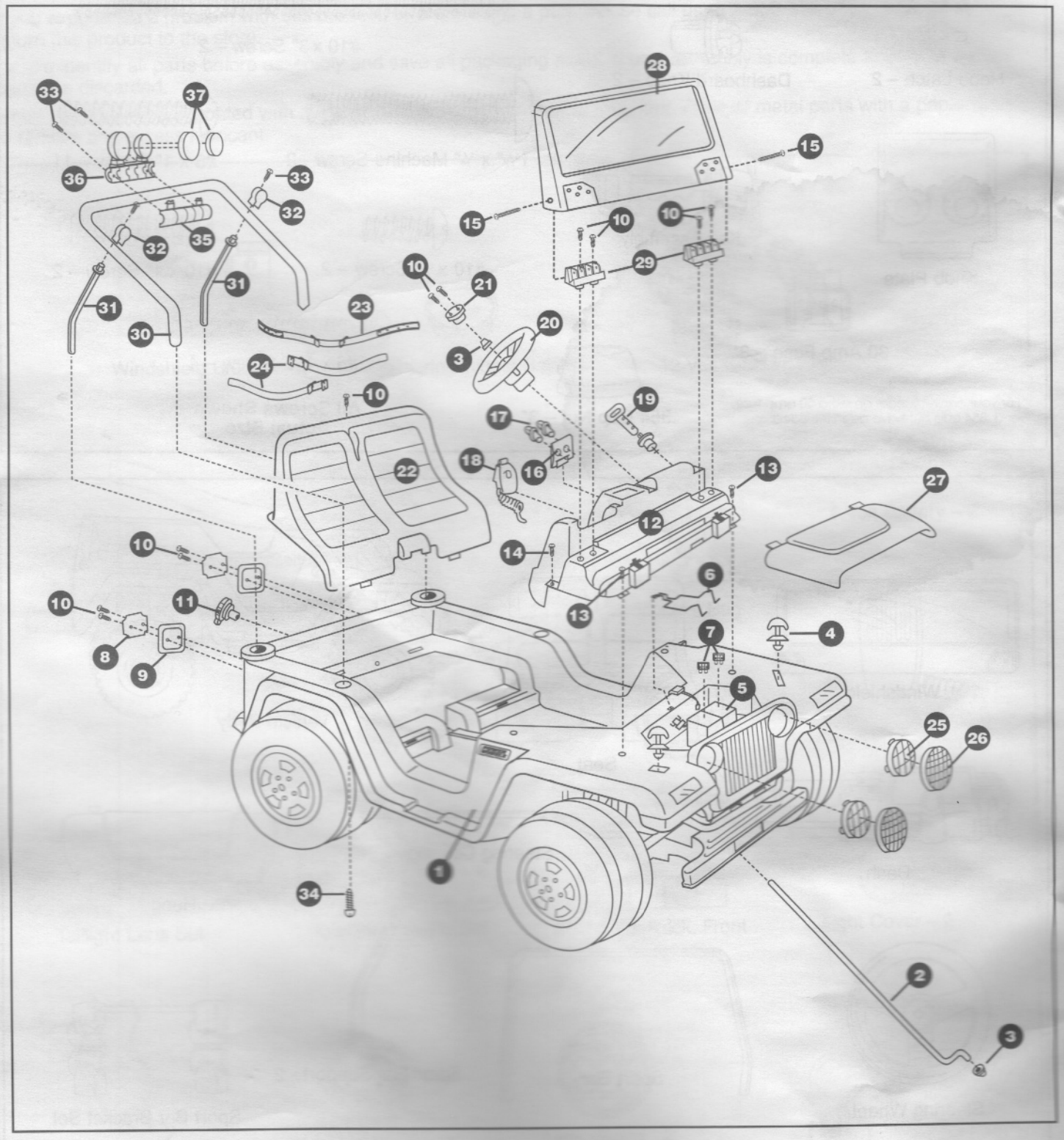

Parts List

No.	Part	Quantity	No.	Part	Quantity
1	Vehicle Body	1	20	Steering Wheel	1
2	Steering Column	1	21	Steering Wheel Cap	1
3	.354 Cap Nut	2	22	Seat	1
4	Hood Latch	2	23	Long Seat Belt Strap	1
5	6 Volt Battery	2	24	Short Seat Belt Strap	2
6	Battery Retainer	1	25	Headlight Lens	2
7	30 Amp Fuse	2	26	Lens Guard	2
8	Taillight Lens	2	27	Hood	1
9	Taillight Housing	2	28	Windshield	1
10	#8 x 1" Screw	11	29	Windshield Bracket	2
11	Gas Cap	1	30	Sport Bar	1
12	Dash	1	31	Sport Bar Support	2
13	#10 x 1" Screw	2	32	Sport Bar Bracket	2
14	#10 x 1/2" Screw	2	33	#6 x 1 1/2" Screw	4
15	#10 x 3" Screw	2	34	1 1/2" x 1/4" Machine Screw	2
16	Knob Plate	1	35	KC™ Light Rack, Front	1
17	Dashboard Knob	2	36	KC™ Light Rack, Rear	1
18	Microphone	1	37	Light Cover	2
19	Key Assembly	1			

E Battery Charging

⚠ WARNING

- The batteries must be handled by adults only. The batteries are heavy and contain sulfuric acid (electrolyte). Dropping the batteries could result in serious injury.
- Never allow children to charge the batteries. Battery charging must be done by adults only. A child could be injured by the electricity involved in charging the batteries.
- Use of the wrong type batteries, fuses or charger could cause a fire or explosion, resulting in serious injury.
- Use of Power Wheels® components in products other than Power Wheels® vehicles could cause overheating, fire or explosion.
- Read the cautions on the back panels of the batteries.
- Never lift or carry the batteries by the wires or connectors. This can damage the batteries and possibly cause a fire. Lift and carry the batteries by the cases only.
- Examine the batteries, charger and their connectors for excessive wear or damage each time you charge the batteries. If damage or excessive wear is detected, do not use the charger or the vehicle until you have replaced the worn or damaged part.
- Never alter this vehicle or its electrical system in any way. Alterations could cause a fire resulting in injury and could also ruin the electrical system.

Battery Charging

- **Your new batteries must be charged for at least 18 hours before you use them in your vehicle for the first time.**
- We recommend that you start charging your batteries before beginning assembly of your new vehicle.
- The charger is not a toy.
- Use only a Power Wheels® Type H 12 volt charger (120 VAC 60 Hz 28W with an output of 12 VDC 1200mA) to charge your Power Wheels® 6 volt batteries.
- The batteries must be upright while charging.
- Do not short circuit the batteries.
- You do not need to remove the batteries from your vehicle to recharge them.

⚠ CAUTION

Use the charger indoors only.

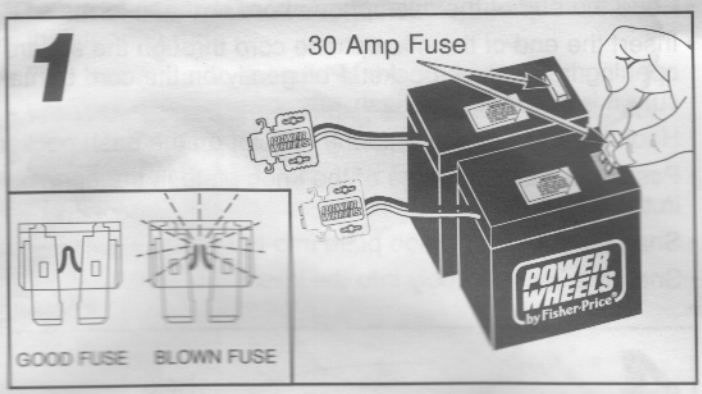

- If you are charging the batteries for the first time, insert a 30 amp fuse into each battery before charging.

Note: The top of the fuse will not be flush with the top of the battery when properly installed.

- If you are recharging your batteries, make sure the 30 amp fuses already installed in the batteries are in good condition. Remove the fuses from the batteries and look at them to make sure they are not blown. Replace a blown fuse with a new Power Wheels® 30 amp fuse.

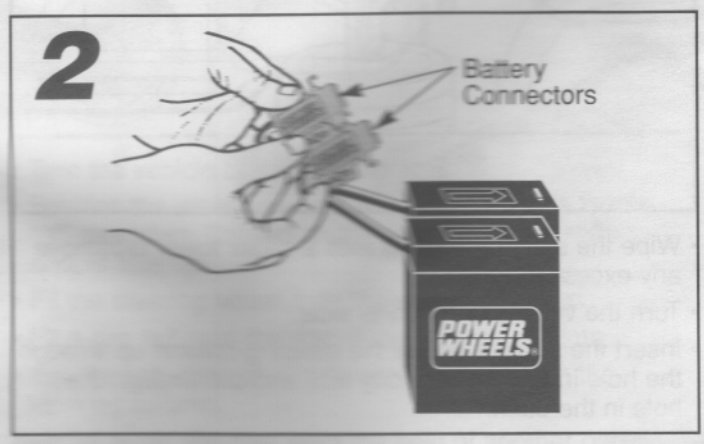

- Stack one battery connector on top of the other and snap them together.

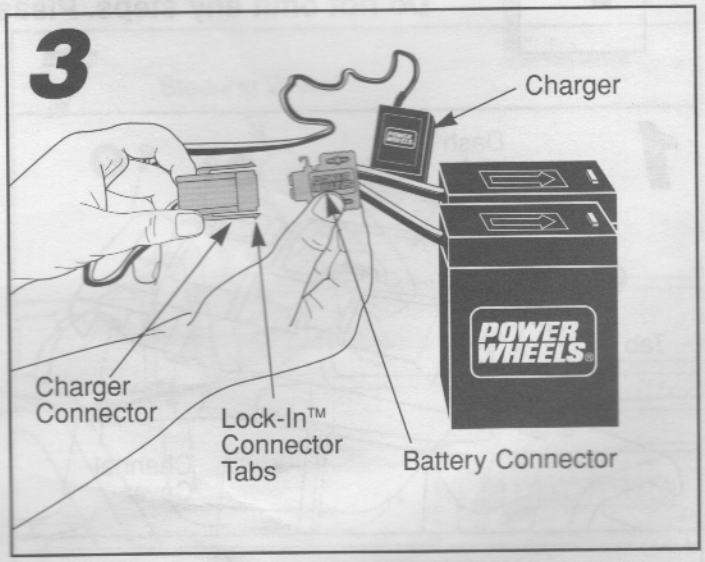

- Squeeze the Lock-In™ connector tabs on the charger connector and plug it into the battery connector.

IMPORTANT NOTE! If you are recharging your batteries, you will first need to disconnect the battery connector from the motor harness connector under the hood.

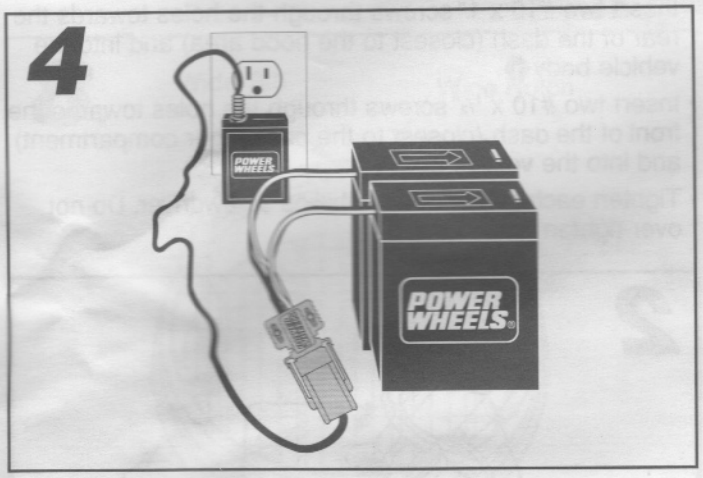

- Plug the charger into a standard 120 volt wall outlet.

Note: If power flow to the wall outlet is controlled by a switch, make sure the switch is "ON".

- Before first-time use, charge the batteries for **at least 18 hours.** Never charge the batteries longer than 30 hours.

Note: The batteries must be upright while charging.

- Recharge the batteries for at least 14 hours after each use of your vehicle. Do not charge the batteries longer than 30 hours.
- Once the batteries are charged, disconnect the charger connector from the battery connector. Unplug the charger from the wall outlet. The batteries are now ready to be installed in your vehicle. Please see the Battery Installation section on page 18 for detailed instructions on installing your batteries. If your batteries are already installed in your vehicle, simply re-connect the battery connector and motor harness connector and lower and fasten the hood.

F Assembly

Do not omit any steps. Please set aside at least 45 minutes for assembly.

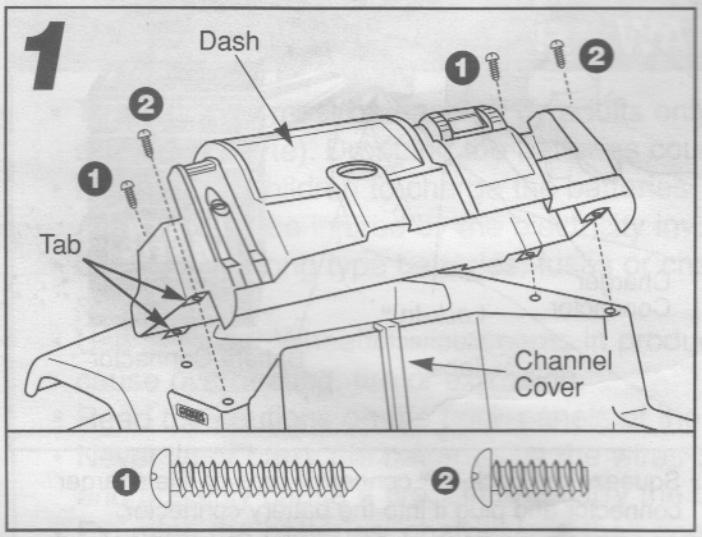

- Position the dash on the vehicle body. Make sure the holes in the dash tabs align with the holes in the vehicle body and that the channel cover is captured by the dash.
- Insert two #10 x 1" screws through the holes towards the rear of the dash (closest to the hood area) and into the vehicle body ❶.
- Insert two #10 x ½" screws through the holes towards the front of the dash (closest to the passenger compartment) and into the vehicle body ❷.
- Tighten each screw with a Phillips screwdriver. Do not over-tighten.

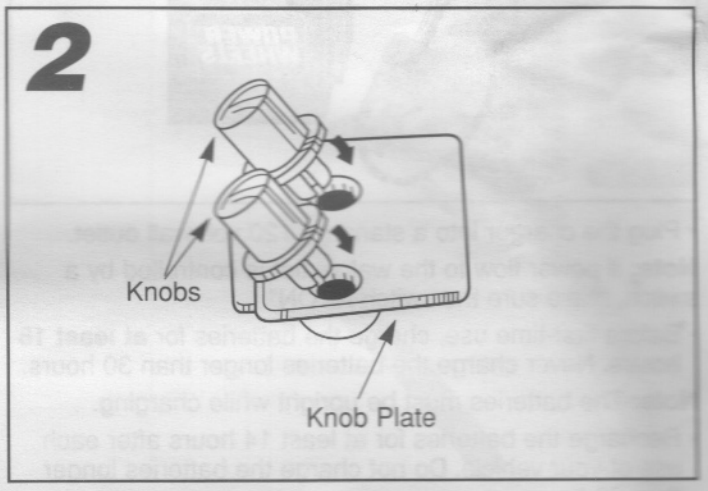

- Snap the knobs into the knob plate.

Note: Gently squeeze the tabs on the knobs together before inserting the knobs into the knob plate.

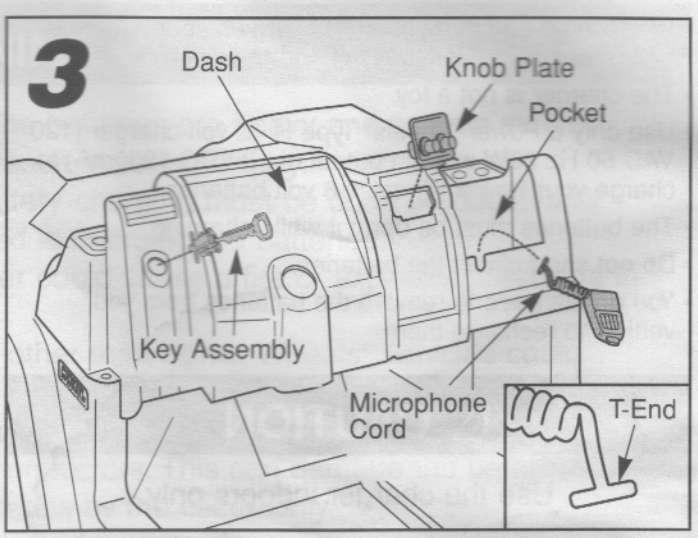

- Bend the end of the microphone cord so that it forms a "T".
- Insert the end of the microphone cord through the square opening in the dash pocket. Pull gently on the cord to make sure it is secure in the dash.
- Hook the microphone onto the "U" slot on the dash pocket.
- Position the bottom edge of the knob plate in the opening in the dash.
- Snap the top of the knob plate into the dash.
- Snap the key assembly into the dash.

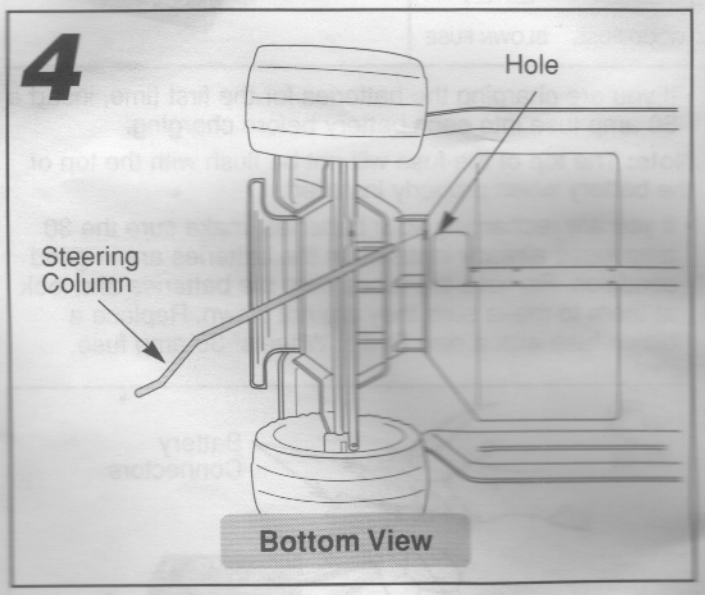

- Wipe the steering column with a paper towel to remove any excess lubricant.
- Turn the vehicle body on its side.
- Insert the straight end of the steering column up through the hole in the vehicle body wall and out through the hole in the dash.

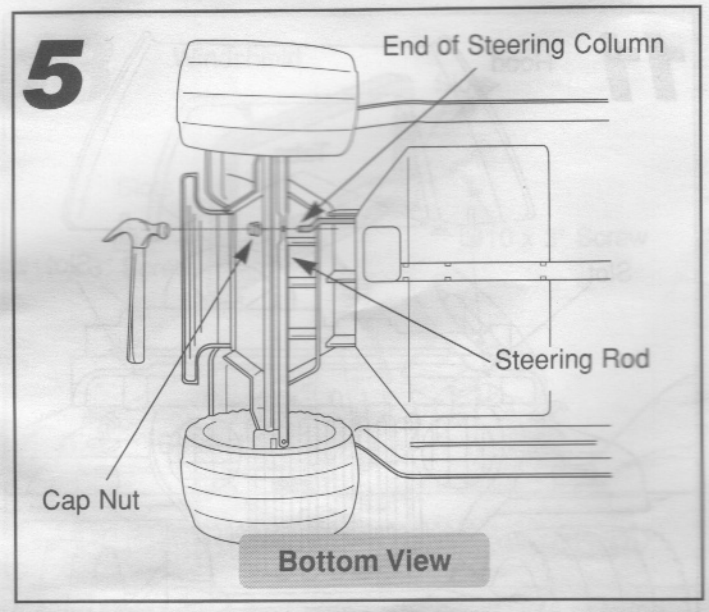

- Insert the end of the steering column through the hole in the steering rod.
- Fit a cap nut onto the end of the steering column.
- While supporting the steering column, tap the cap nut with a hammer to secure it on the steering column.

Helpful Hint! You may want the help of another person to support the steering column while you tap the cap nut with the hammer.

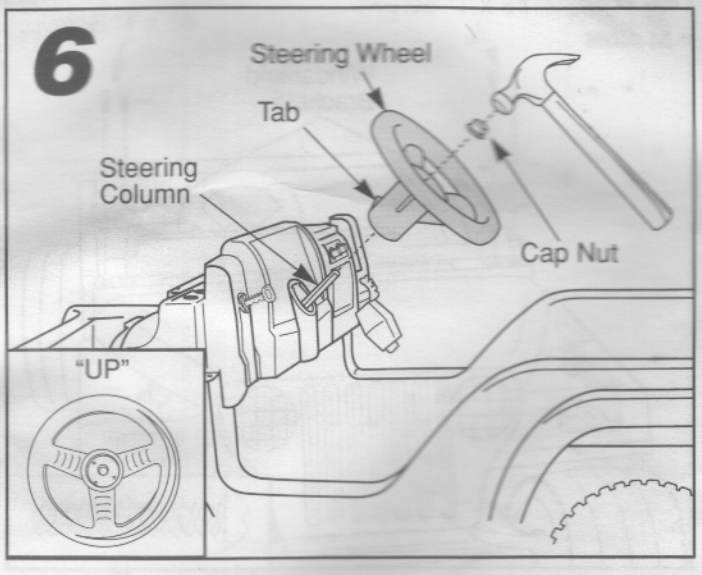

- Turn the vehicle body upright.
- Position the steering wheel so that the spokes form a **"Y"** as shown. The tab on the steering wheel stem should face up.
- Fit the steering wheel onto the steering column.
- Fit a cap nut onto the end of the steering column.
- Tap the cap nut with a hammer to secure it on the steering column.

Helpful Hint! You may want the help of another person to support the steering column while you tap the cap nut with the hammer.

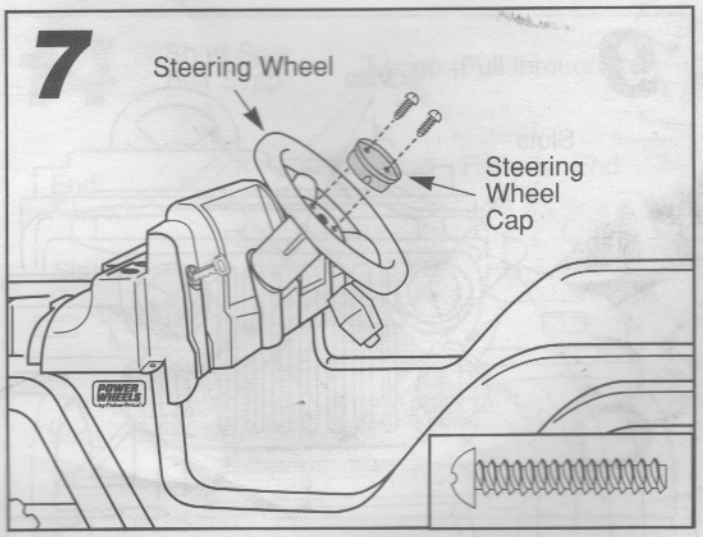

- Fit the steering wheel cap into the center of the steering wheel with the screw holes aligned.
- Insert two #8 x 1" screws as shown.
- Tighten the screws with a Phillips screwdriver. Do not over-tighten.

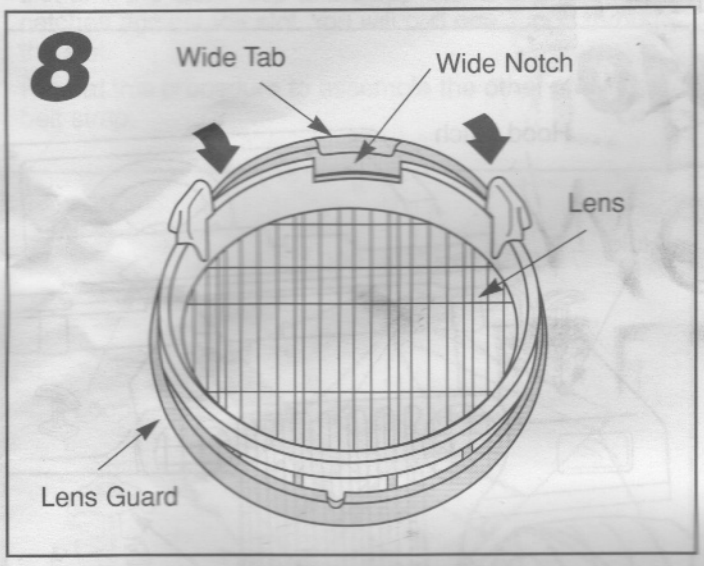

- Fit the wide notch in the side of a headlight lens under the wide tab on a lens guard.
- Press firmly on the inside of the headlight lens to snap it into the lens guard.
- Repeat this procedure to assemble the other headlight lens to the remaining lens guard.

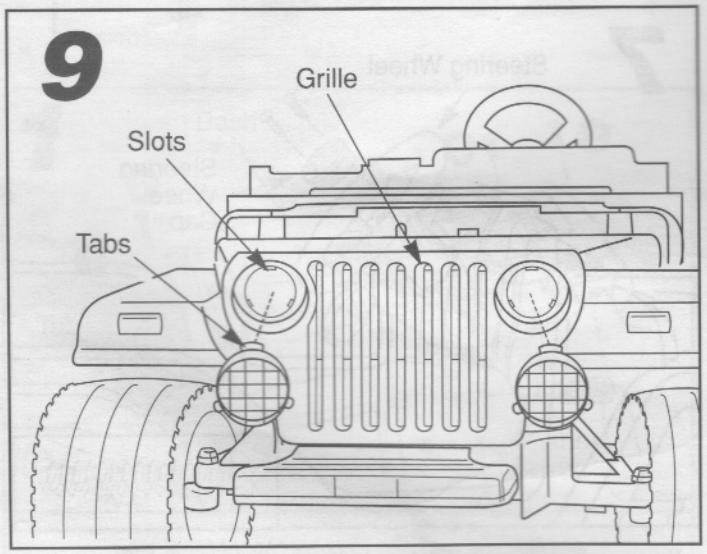

- Fit the lens tabs on the back of a lens assembly into the headlight slots in the grille.
- Press firmly to snap the lens assembly into the grille.
- Repeat this procedure to snap the other lens assembly into the grille.

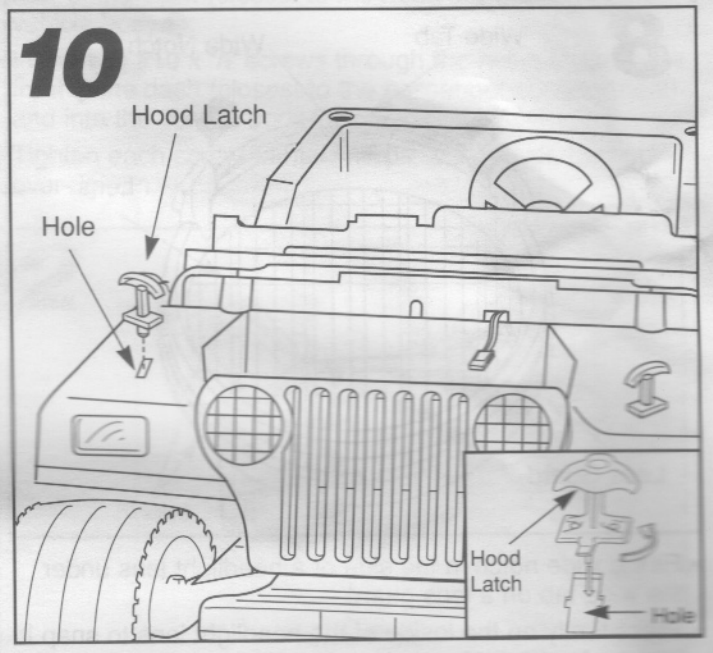

- Insert a hood latch into one of the holes in the vehicle body, near the hood area.
- Twist the base of the hood latch 1/4 turn to secure it in the vehicle body.
- Repeat this procedure on the other side of the hood area to attach the other hood latch to the vehicle body.

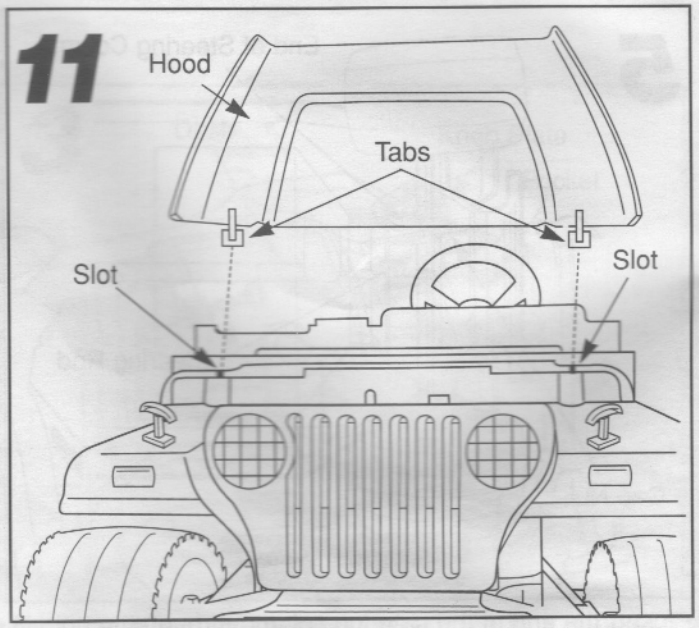

- Position the hood over the front of the vehicle body as shown.
- Insert the tabs on the hood into the slots in the vehicle body.
- Close the hood.

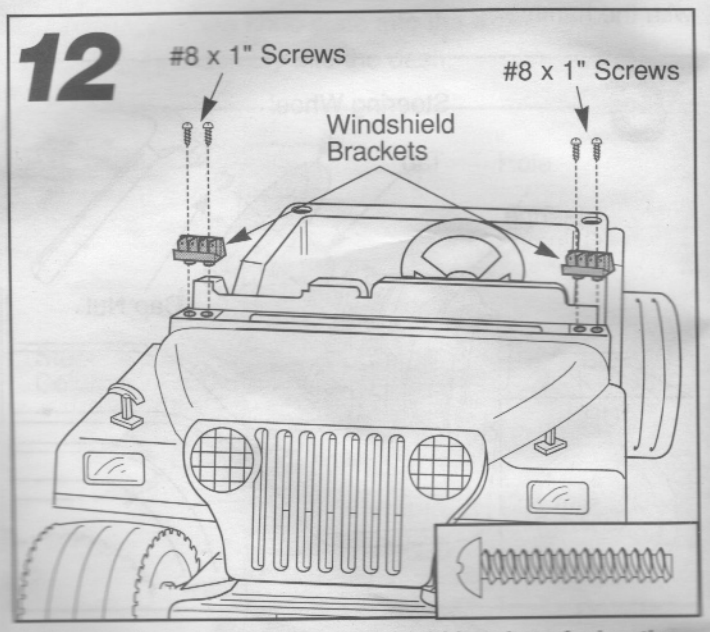

- With the flat sides of the windshield brackets facing the dash, fit the screw pegs on the windshield brackets into the holes in the top surface of the dash.
- Insert two #8 x 1" screws into each windshield bracket.
- Tighten the screws with a Phillips screwdriver.
- Do not over-tighten.

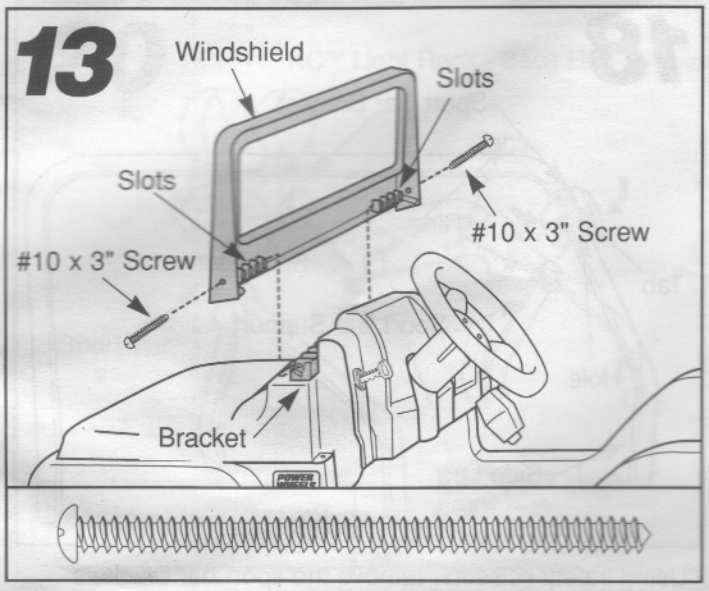

- Fit the slots on the back side of the windshield onto the windshield brackets.
- Insert a #10 x 3" screw through the hole in one side of the windshield and through the holes in the hinge bracket.
- Tighten the screw with a Phillips screwdriver. Do not over-tighten.
- Insert a #10 x 3" screw through the hole on the other side of the windshield.
- Tighten the screw with a Phillips screwdriver. Do not over-tighten.

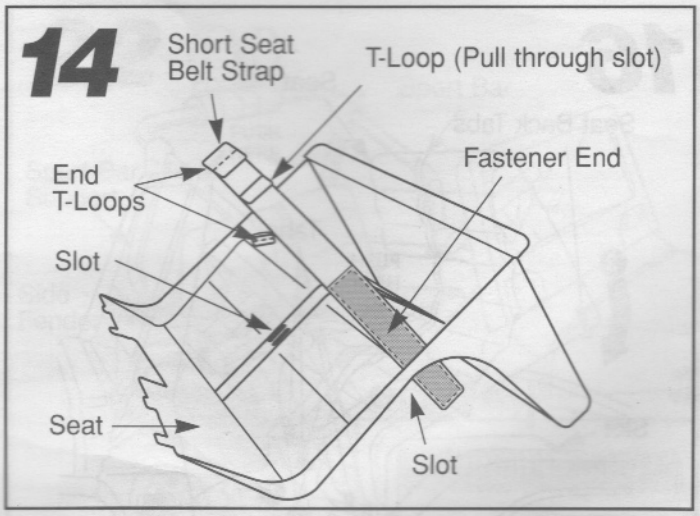

- Turn the seat upside down.
- Insert the fastener end of a short seat belt strap through the slot near the outer edge of the seat. Make sure the side of the seat belt with the fastener faces the outer edge of the seat.
- Pull the short seat belt strap completely through the slot until the last T-loop at the opposite end of the belt catches against the slot. You will pull one T-loop through the slot.
- Repeat this procedure to assemble the other short seat belt strap.

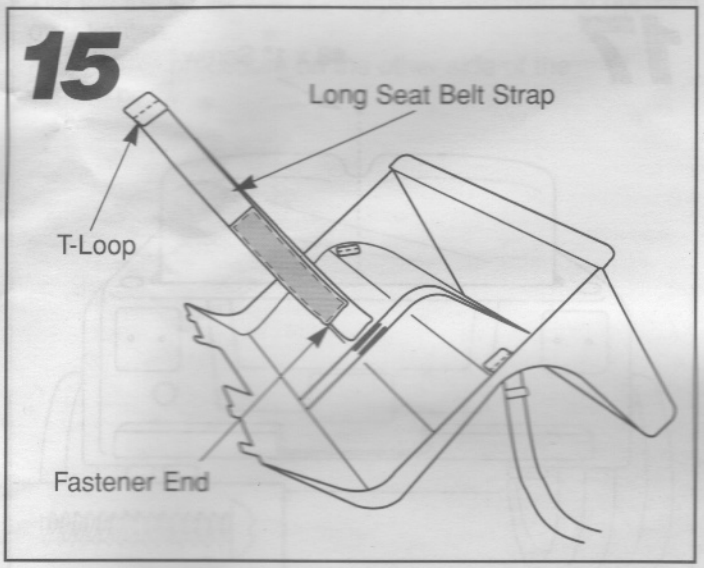

- Insert each fastener end of the long seat belt strap through a slot in the center of the seat. Make sure the fasteners face the outer edge of the seat.
- Pull each side of the long seat belt strap evenly through the slots. Make sure to pull each T-loop through a slot.
- Turn the seat upright.

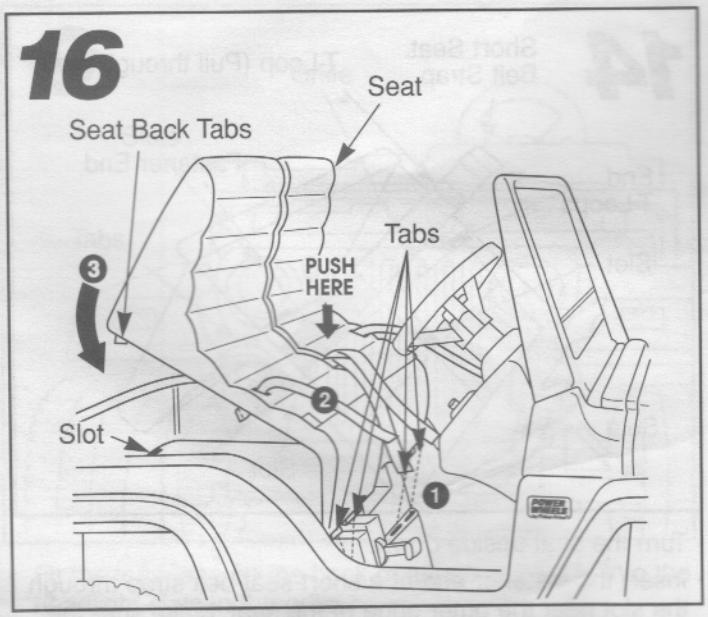

- With the seat at an angle, insert the tabs on the front edge of the seat into the slots in the foot-well wall ❶.
- Push down firmly on the edge of the seat above each tab to snap the tabs into the slots ❷.
- Rotate the back of the seat down ❸ to snap the seat back tabs into the slots in the vehicle body. Push down firmly on the seat back.

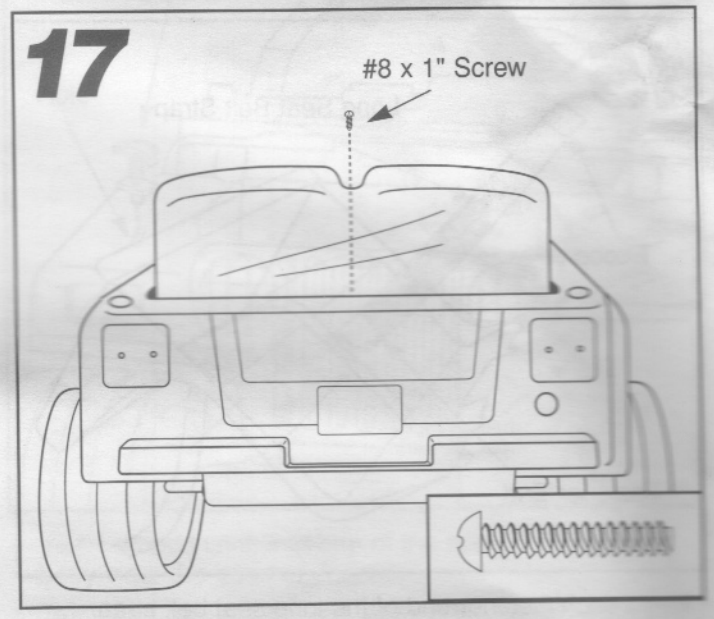

- Insert a #8 x 1" screw into the rear of seat as shown.
- Tighten the screw with a Phillips screwdriver. Do not over-tighten.

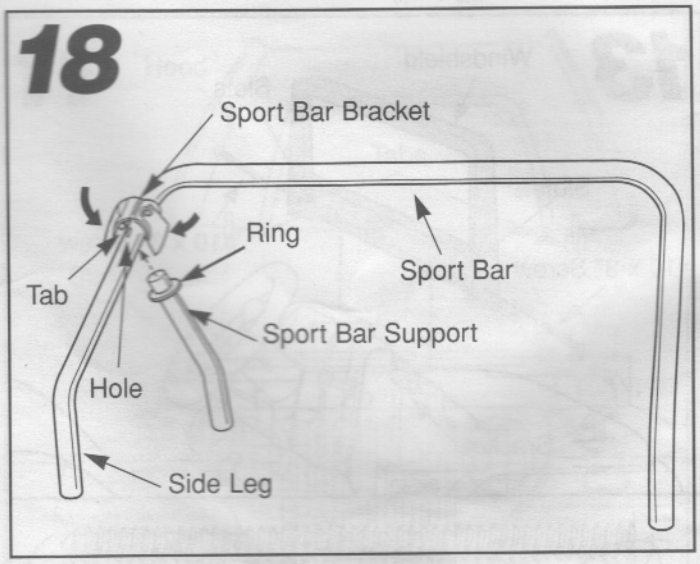

- Using safety scissors, remove the sport bar brackets from the plastic connector. Dispose of the plastic connector.
- Position the sport bar upright.
- Position a sport bar bracket above one of the sport bar side legs, as shown.
- Insert the tab on the inside of a sport bar bracket into the hole in the sport bar side leg.
- Fit the ring on a sport bar support against the end of the sport bar bracket.
- Fold the sport bar bracket over the sport bar to close it around the sport bar and sport bar support.

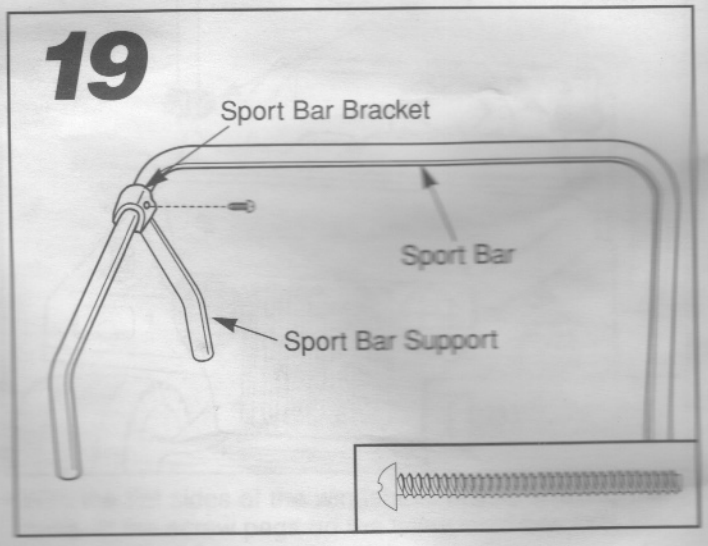

- Insert a #6 x 1½" screw into the sport bar bracket as shown.
- Tighten the screw with a Phillips screwdriver. Do not over-tighten.
- Repeat steps 18 and 19 to attach the other sport bar support to the other sport bar side leg.

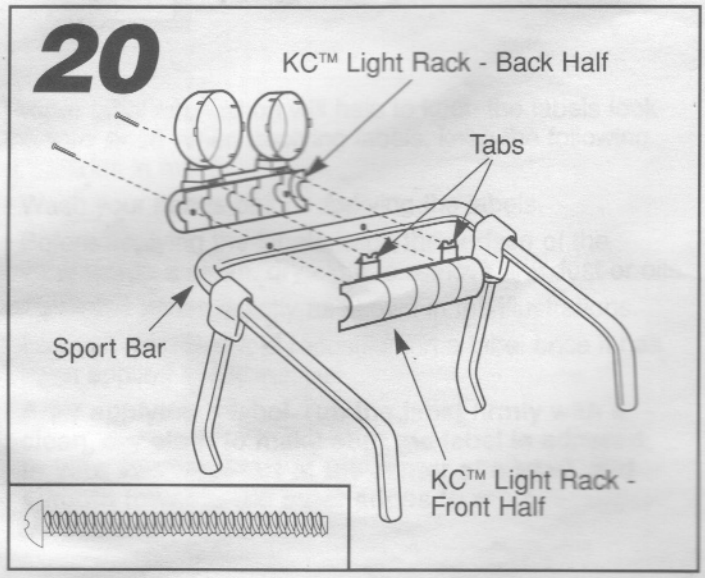

- Position the sport bar with the ends on a flat surface, as shown.
- Fit and hold the front and back halves of the KC™ light rack against the sport bar. Make sure the two KC™ light rack halves are aligned, and that the screw holes in the KC™ light rack are aligned with the screw holes in the sport bar.
- Snap the tabs on the front half of the KC™ light rack into the slots below the light housings on the rear half of the KC™ light rack.
- Insert two #6 x1½" screws through the holes in the back of the KC™ light rack, through the sport bar, and into the front half of the KC™ light rack.
- Tighten the screws with a Phillips screwdriver. Do not over-tighten.

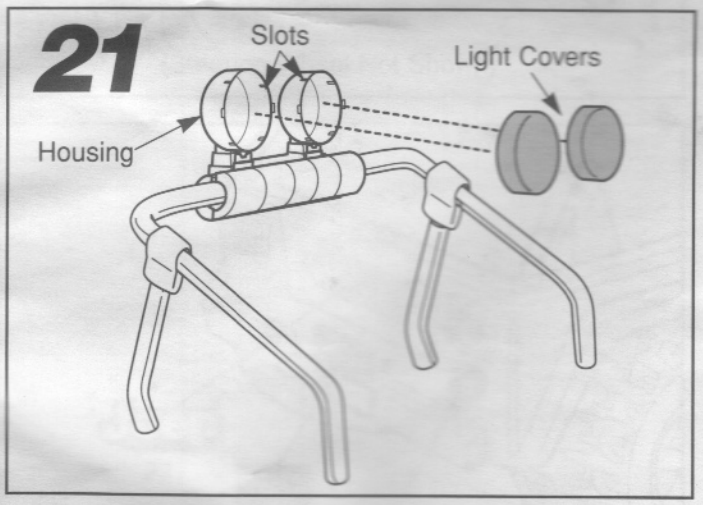

- Align the four tabs on the inside of a light cover with the four slots in one of the light housings on the KC™ light rack.
- Push firmly on the light cover to snap it to the housing.
- Repeat this procedure on the other side of the KC™ light rack to assemble the other light.

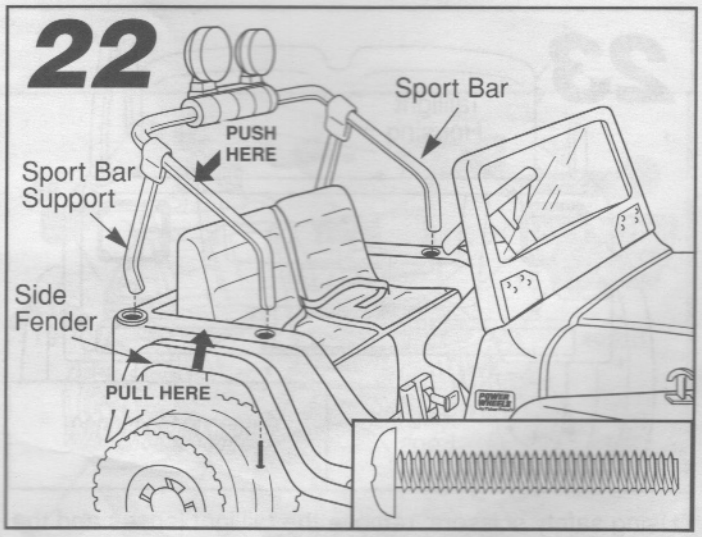

- Place the sport bar and sport bar support legs into the holes in the vehicle body.
- Push down firmly on a sport bar side leg while pulling up on the side fender to fit the sport bar into the vehicle body.
- Repeat this procedure on the other side of the vehicle body.
- Insert a 1½" x ¼" machine screw into the hole closest to the front of the vehicle in the underside of the rear wheel well, through the vehicle body and into the end of the sport bar.
- Tighten the screw with a Phillips screwdriver. Do not over-tighten.
- Repeat this procedure on the other side of the vehicle body.

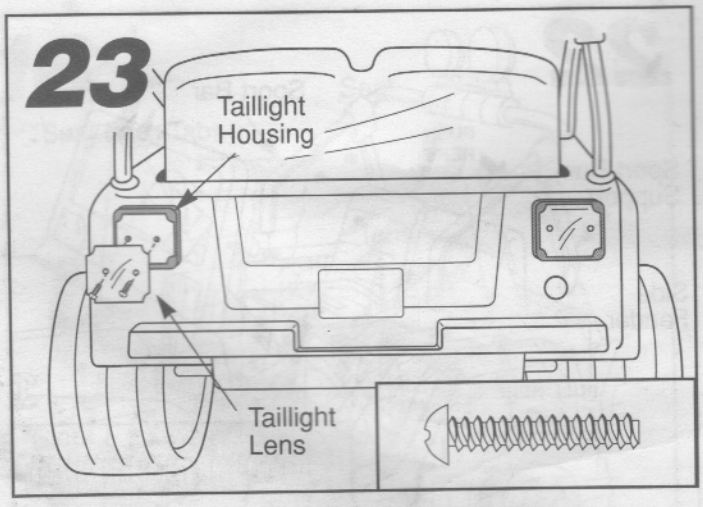

- Using safety scissors, remove the taillight lenses and the taillight housings from the plastic connectors. Dispose of the plastic connectors.
- Face the rear of the vehicle.
- Fit a taillight lens inside a taillight housing.
- Position the taillight housing with lens against the vehicle body with the screw holes aligned, as shown.
- Insert two #8 x 1" screws through the taillight lens and housing and into the vehicle body as shown.
- Tighten the screws with a Phillips screwdriver. Do not over-tighten.
- Repeat this procedure to attach the other taillight.

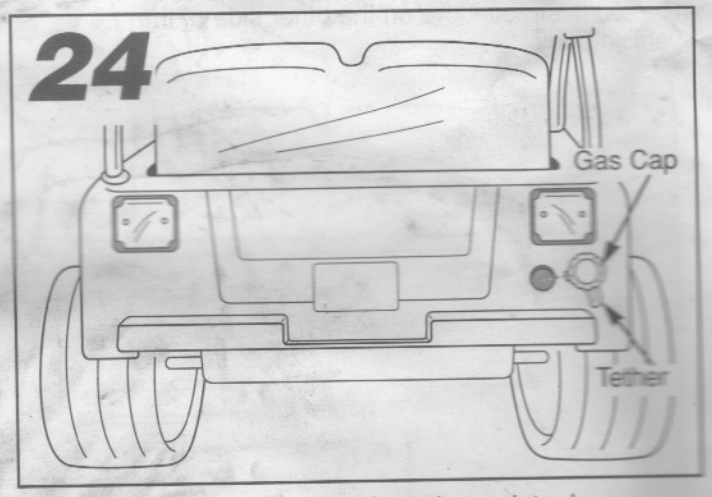

- Position the gas cap so that its tether points down.
- Snap the gas cap into the hole under the right taillight.

G Label Decoration

Proper label application will help to keep the labels looking their best! When applying labels, keep the following guidelines in mind:

- Wash your hands before applying the labels.
- Before applying the labels, wipe the surface of the vehicle with a clean, dry cloth to remove any dust or oils.
- Place the labels exactly as shown in the illustrations.
- For best results, avoid repositioning a label once it has been applied to the vehicle.
- **After applying a label, rub the label firmly with a clean, dry cloth to make sure the label is adhered to your vehicle. Start at the center of a label, and smooth towards the outer edges to remove air bubbles.**

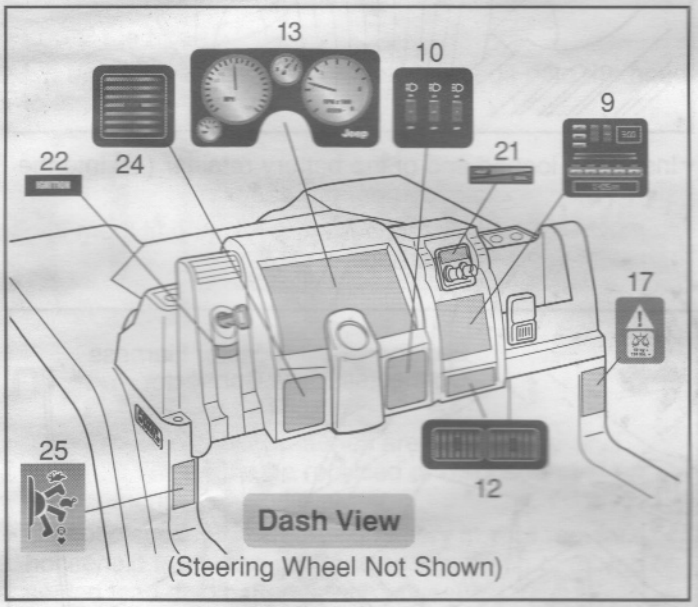

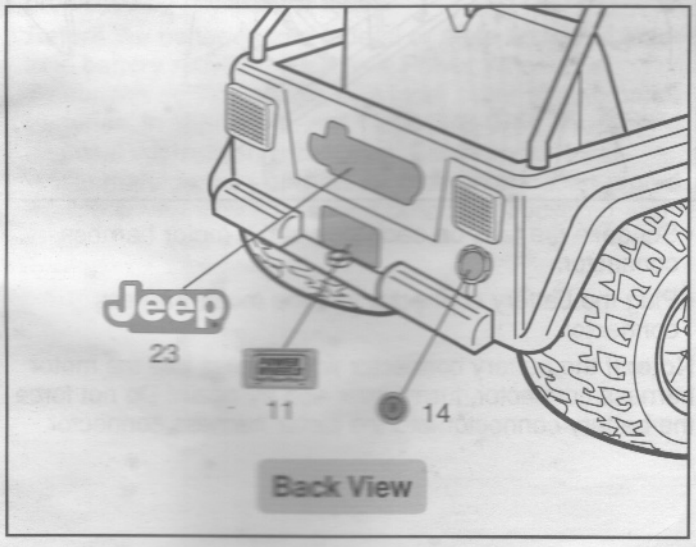

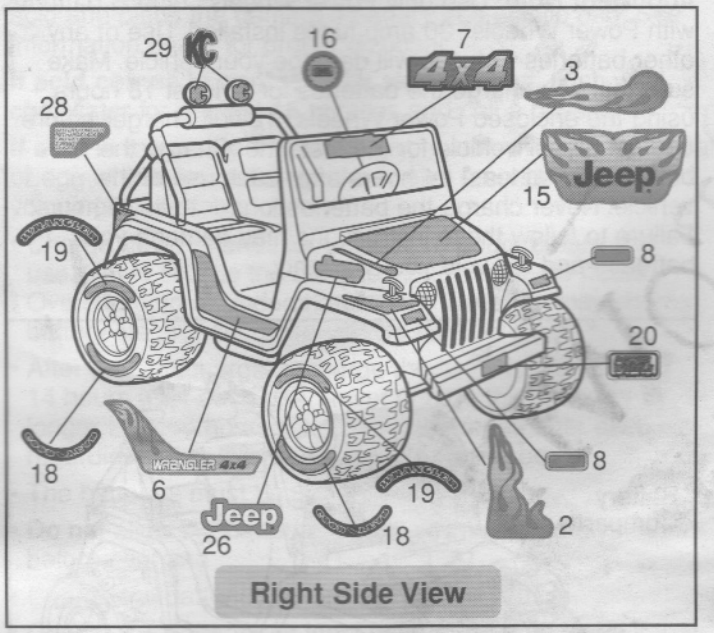

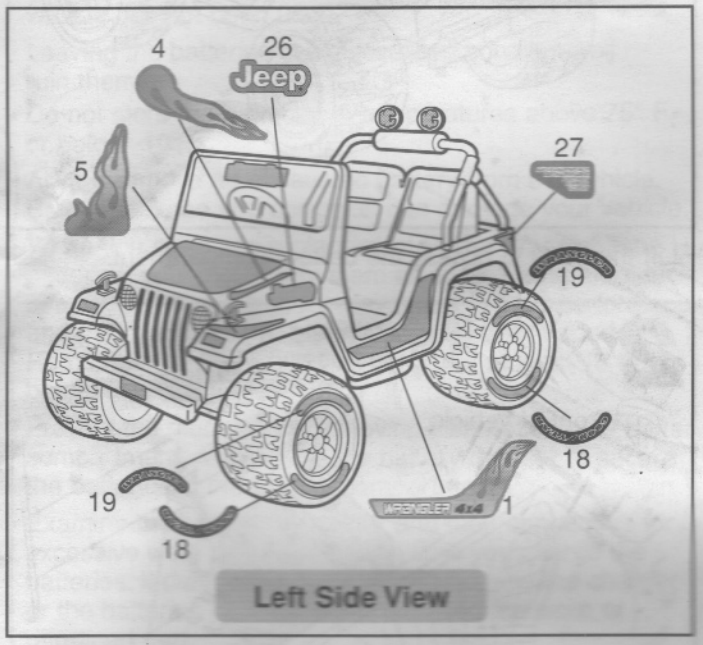

One-time assembly is now complete.

IMPORTANT NOTES:

- Please carefully read the owner's information in this manual and teach your child about proper vehicle operation and rules for safe driving before allowing operation of this vehicle.
- For safety reasons, your vehicle has been pre-set so that it will only operate at low speed (2½ mph, maximum). Make sure that your child can safely operate this vehicle at low speed before adjusting the vehicle to run at high speed (5 mph, maximum).
  To disconnect high speed lock-out, please see page 22.

H Battery Installation

Important Note: Use only Power Wheels® Type H batteries with Power Wheels® 30 amp fuses installed. Use of any other batteries or fuses will damage your vehicle. Make sure that you charge the batteries for at least 18 hours using the enclosed Power Wheels® 12 volt charger before operating your vehicle for the first time. Charge the batteries for at least 14 hours after each use of the vehicle. Never charge the batteries longer than 30 hours. Failure to follow these instructions may damage your batteries and will void your warranty.

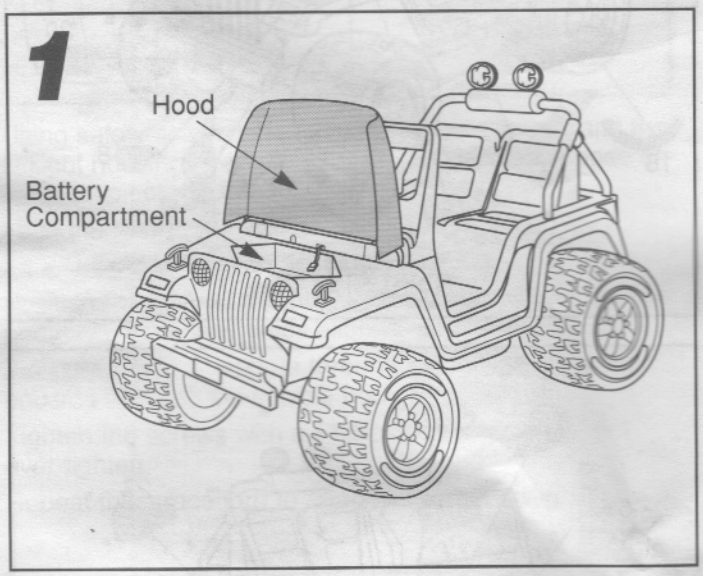

- Lift the hood to access the battery compartment.

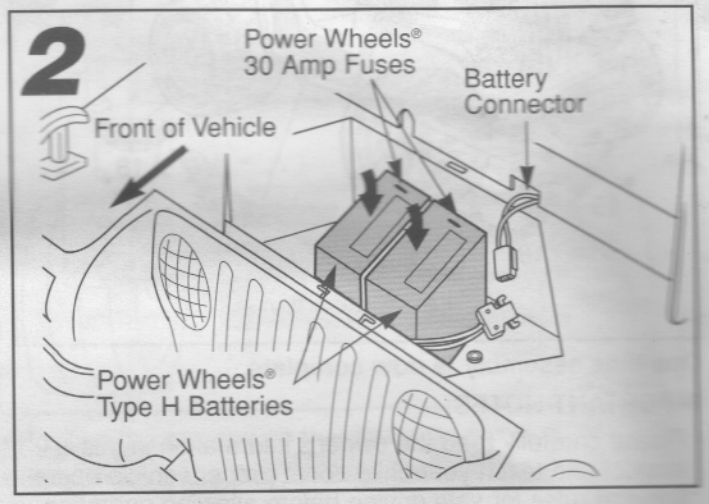

- Place both Power Wheels® Type H batteries upright in the battery compartment. **Make sure the battery connectors extend toward the front of the vehicle.**
- Make sure a Power Wheels® 30 amp fuse in good condition is installed in each of the batteries and that the battery connectors are snapped together.

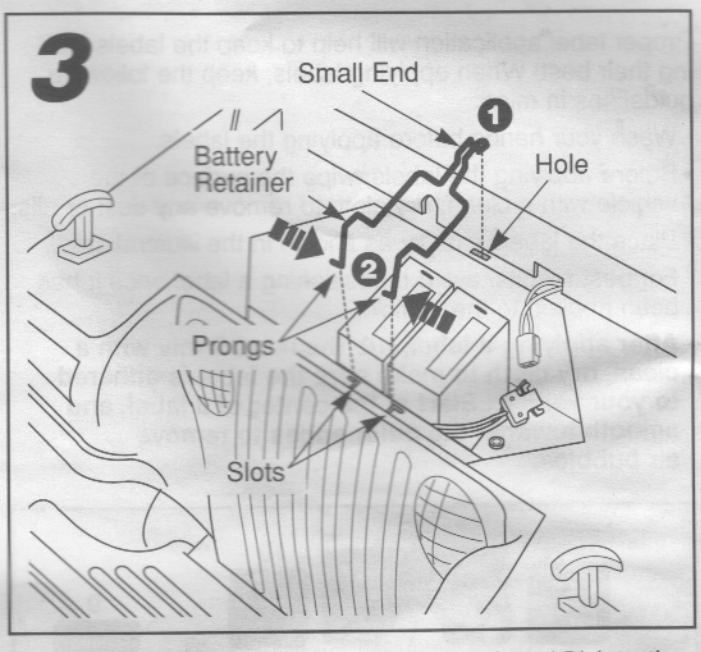

- Insert the looped end of the battery retainer (❶) into the slot in the vehicle body near the dash.
- Squeeze the battery retainer arms (❷) and fit them into the slots in the vehicle body.

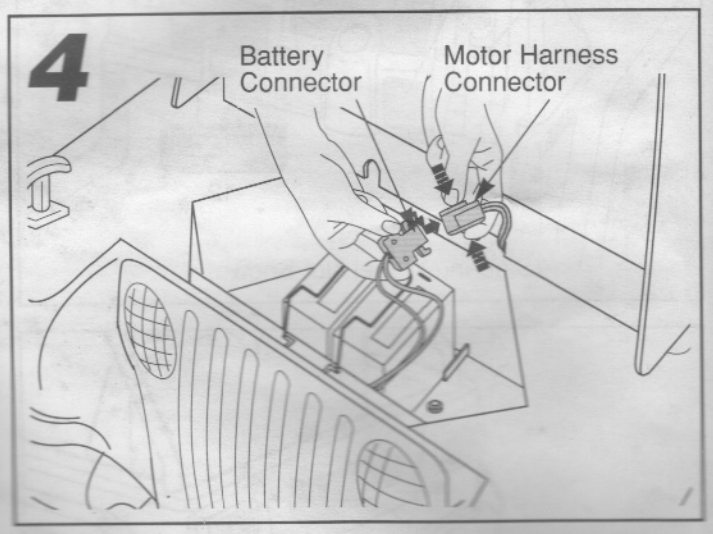

- Squeeze the tabs on each side of the motor harness connector.
- Plug the battery connector into the motor harness connector.

Note: If the battery connector will not plug into the motor harness connector, turn it over and try again! Do not force the battery connector into the motor harness connector.

Battery Installation

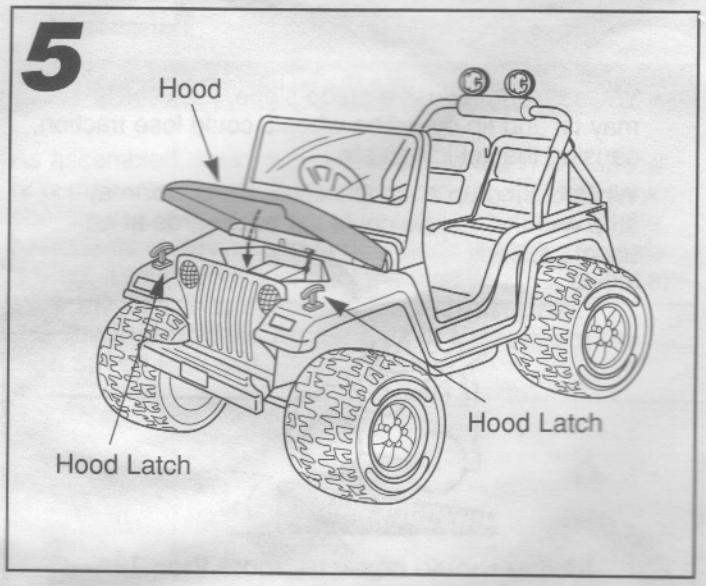

- Lower the hood.
- Lift the hood latches and fit the latch pegs onto the hood to fasten it.

I Battery Care and Disposal

Disposal

- Your Power Wheels® batteries are sealed lead-acid batteries.They must be recycled or disposed of in an environmentally sound manner.
- Do not dispose of a lead-acid battery in your regular, household trash. The incineration, landfilling or mixing of sealed lead-acid batteries with household trash is prohibited by law in most areas.
- Return the batteries to a federal or state approved lead-acid battery recycler, such as a Power Wheels® authorized service center, or a local seller of automotive batteries. In Minnesota, call 1-800-348-0751 if further disposal information is required. Contact your local waste management officials for other information regarding the environmentally sound collection, recycling and disposal of lead-acid batteries.

Battery Care and Disposal

Care

If a battery leak develops, avoid contact with the leaking acid and place the damaged battery in a plastic bag. See information below for proper disposal.

If acid comes in contact with skin or eyes, flush with cool water for at least 15 minutes and call a physician.

If acid is internally ingested, give water, milk of magnesia or egg whites immediately. Never give emetics or induce vomiting. Call a physician.

- Charge new batteries for at least 18 hours before first use. Never charge the batteries longer than 30 hours. Overcharging or undercharging the batteries may shorten battery life and decrease vehicle running time.
- After the first charge, recharge the batteries for at least 14 hours after each use. Never charge the batteries longer than 30 hours. Charge the batteries after each use, regardless of how long the vehicle was used.
- The batteries must be upright while charging.
- Do not allow the batteries to run down completely before charging.
- Charge the batteries before storing the vehicle.
- Charge the batteries at least once per month, even if the vehicle has not been used.
- Leaving the batteries in a discharged condition will ruin them.
- Do not store the batteries in temperatures above 75° F or below -10° F.
- Always remove an exhausted battery from the vehicle. Battery leakage and corrosion can damage your vehicle.
- When you purchase replacement Power Wheels® Type H batteries, you should buy them as a set. Using an older battery with a new battery may result in poor performance and may cause permanent damage to both batteries. Remember to charge new batteries for at least 18 hours before first use.
- Prevent the batteries from moving freely inside the battery compartment. Always use the battery retainer to secure the batteries in the battery compartment.
- Examine the batteries, charger and their connectors for excessive wear or damage each time you charge the batteries. If damage is detected, do not use the charger or the batteries until you have replaced the worn or damaged part.
- Attempting to charge the batteries without 30 amp fuses or with a blown fuse will not damage the batteries, but they will not charge. Check the fuses to make sure they are in good condition each time you charge the batteries.

J Rules for Safe Driving

⚠ WARNING

- Adult supervision is required. Children do not have the judgement necessary to avoid many accidents. Be sure that children operating this vehicle can do so safely and that they are supervised at all times.
- Never use near steps, driveways, steep inclines, roadways, alleys, swimming pool areas or other bodies of water.
- Always wear shoes or sneakers when operating this vehicle.
- Never allow more than two riders; one driver and one passenger.
- The riders should sit on the seat when the vehicle is in operation.

Teach Safety Rules to Children

While children can quickly develop the skill necessary to drive this vehicle, it is important to remember that their judgement skills are still very immature. Unsupervised driving by children can lead to serious injury. Before children use **Jeep® Wrangler**, an adult should carefully evaluate the driving area as well as the children's skill level and ability to drive this vehicle safely. Children are not always able to recognize or anticipate hazards, even when they have been taught about them. There is no acceptable substitute for adult supervision.

Teach appropriate safety rules to your child before allowing operation of this vehicle. These rules should also be reviewed with neighborhood children or other playmates who want to drive this vehicle.

1. Do not allow any child to drive the vehicle in the street or near moving (motorized) vehicles.
2. Do not allow any child to drive near bodies of water (such as pools or creeks), obstructions (such as furniture, low tree limbs or play equipment), or drop-offs (such as stairs or decks).
3. Do not allow any child to drive the vehicle in the dark. A child could encounter unexpected obstacles and have an accident. Operate the vehicle only in the daytime or in a well-lit area.
4. Teach your child to avoid driving on steep inclines or slopes. Restrict your child's driving to areas that are fairly level with gentle inclines or slopes of no more than 10°.
   - While driving down a steep slope, the vehicle may gain unsafe speed, even if the foot pedal is released to stop.
   - While driving across a steep slope, the vehicle may tilt and tip over. The wheels could lose traction, causing the vehicle to slip.
   - While driving up a steep incline, the motor may stop and the vehicle could roll backwards at an unsafe speed.

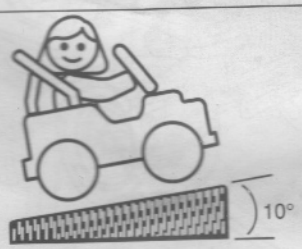

Incline should never be more than 10°

5. Do not operate this vehicle with more than two riders; one driver and one passenger seated in the seating area. A child who is not sitting on the seat or who is standing on the vehicle could fall off, cause a tip-over or block the driver's view. A child could be seriously injured.
6. Always wear shoes or sneakers when operating this vehicle.
7. Never put anything near any moving parts. Rotating parts such as motors, gear boxes and wheels can snag fingers, hair, etc., causing serious injury. Do not allow operation of the vehicle when it is on its side or in an upside-down position.
8. Do not operate the vehicle near flammable vapors (gasoline, paint thinner, acetone, liquid wax, etc.). The vehicle's electrical switches, like most electrical switches, emit an internal spark when first turned on or turned off. The presence of flammable liquids or vapors could cause an explosion or a fire. Keep all flammable products in tightly sealed containers and away from the vehicle.
9. Do not allow a child to operate the vehicle without proper adult supervision. To prevent unsupervised use of the vehicle, disconnect the motor harness from the batteries when the vehicle is not in use.

   To disconnect the motor harness connector and battery connector:
   - Raise the hood to access the batteries.
   - Squeeze the tabs on the motor harness connector to unplug the battery connector from the motor harness connector.
   - Lower the hood and fasten the hood latches.

K How to Operate Your Vehicle

Beginner Use - Low Speed Drive

As assembled, your vehicle is ready to roll in low speed (2½ mph, maximum). It has been pre-set so it will only operate in low speed. After your child has mastered the basic skills of driving and understands the rules for safe driving, it's time to disconnect the high speed lock-out to allow the vehicle to operate in low or high speed.
See the instructions on page 22 to disconnect the high speed lock-out.

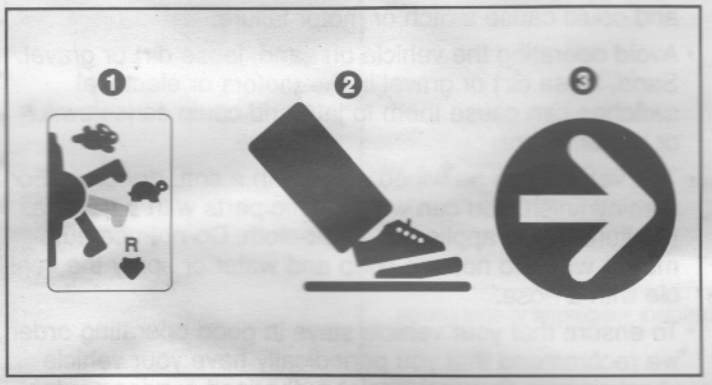

- Make sure the shifter is in the low speed ( ) position 1.
- Press down on the foot pedal 2. The vehicle goes forward at a maximum of 2½ mph 3.
- Help your child practice steering to learn how far and how quickly to turn the steering wheel when driving forward in low speed.

To Stop

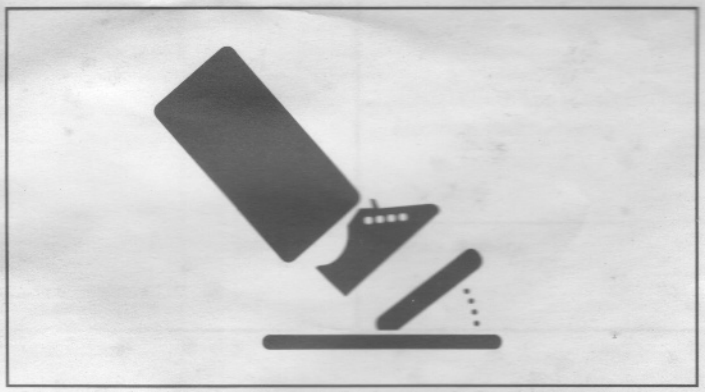

- Your vehicle has a patented electronic braking system that automatically stops the vehicle when your child's foot is lifted from the pedal.
- Make sure your child is comfortable with steering the vehicle and automatically knows how to stop.

To Back Up

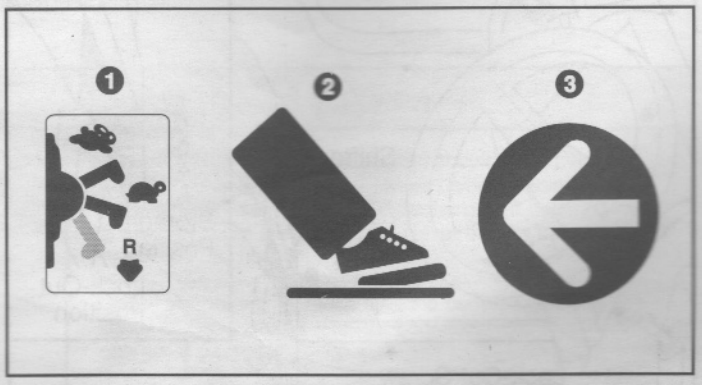

Please Note: To avoid damaging the motors and gears, stop the vehicle before shifting from forward to reverse ( ).

- Once your child is completely comfortable with operating the vehicle in the forward mode, introduce reverse ( ).

To Back Up

- Make sure the shifter is in the reverse ( ) position 1.
- Press down on the foot pedal 2. The vehicle will go in reverse at a maximum of 2½ mph 3. The vehicle is designed to operate in low speed only in reverse.
- Help your child practice steering to learn how far and how quickly to turn the steering wheel when driving in reverse.

How to Operate Your Vehicle

Advanced Use - High Speed Drive

Disconnecting the High Speed Lock-Out

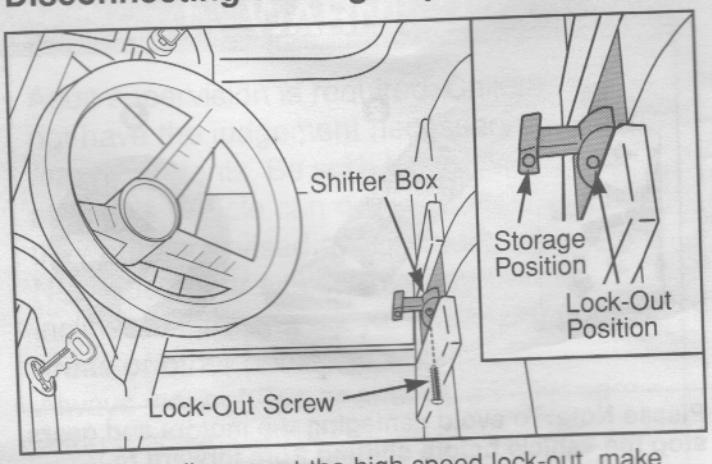

- Before you disconnect the high speed lock-out, make sure your child knows how to steer, how to start and stop the vehicle and knows the rules for safe driving. When the high speed lock-out is disconnected, the vehicle can be driven forward in low speed (2½ mph, maximum) or high speed (5 mph, maximum).
- Make sure the shifter is in the reverse ( ) position.
- Loosen the screw in the shifter box using a Phillips screwdriver.
- Remove the screw.
- Insert the lock-out screw into the hole in the shifter handle to keep it for future use. It can be re-inserted into the shifter box to lock-out high speed.

To Drive

Please Note: To avoid damaging the motors and gears, stop the vehicle before shifting between low and high speed.

- Make sure the shifter is in the high speed ( ) position ❶.
- Press down on the foot pedal ❷. The vehicle goes forward at a maximum of 5 mph ❸.
- Help your child practice steering to learn how far and how quickly to turn the steering wheel when driving forward in high speed.
- Make sure your child is comfortable with steering the vehicle and automatically knows how to stop.
- Stopping in high speed is the same as stopping in low speed. The vehicle automatically stops when your child's foot is lifted from the pedal.

L Caring For Your Vehicle

- Check all nuts, bolts, and their protective coverings regularly and tighten as required. Check plastic parts on a regular basis for cracks or broken pieces.
- During snowy or rainy weather, the vehicle should be stored inside or under a protective cover. Remember to charge the batteries at least once per month while your vehicle is not in regular use.
- Avoid operating the vehicle in wet or snowy conditions, and do not spray the vehicle with a hose. Do not wash the vehicle with soap and water. Water or moisture in the motors or electrical switches can cause them to corrode and could cause switch or motor failure.
- Avoid operating the vehicle on sand, loose dirt or gravel. Sand, loose dirt or gravel in the motors or electrical switches can cause them to jam and could cause switch or motor failure.
- The vehicle can be wiped down with a soft, dry cloth. For a shiny finish, you can wipe plastic parts with a non-wax furniture polish applied to a soft-cloth. Do not use automotive wax. Do not use soap and water or spray the vehicle with a hose.
- To ensure that your vehicle stays in good operating order, we recommend that you periodically have your vehicle checked by a Power Wheels® authorized service center. See page 27 for the list of authorized service centers or call **1-800-348-0751** for the location of the authorized service center nearest you.

M Problems and Solutions Guide

IMPORTANT! If you experience a problem with your vehicle, first check the Problems and Solutions Guide below. If you still experience a problem, please contact Power Wheels® Consumer Affairs, toll-free at **1-800-348-0751** between 8 AM and 6 PM (EST) Monday through Friday. Or, contact your local Power Wheels® authorized service center. For the location nearest you, please refer to the Authorized Service Center list beginning on page 27.

Problem	Possible Cause	Solution
Vehicle does not run	Undercharged batteries	Charge the batteries. New batteries should have been charged for at least 18 hours before using the vehicle for the first time. After first-time use, recharge the batteries for at least 14 hours after each use. Never charge the batteries longer than 30 hours.
		Check all connectors. Make sure the battery connector is tightly plugged into the charger connector, and that the charger is plugged into the wall.
		Make sure power flow to the wall outlet is "ON".
	Charger is not working	There is no sure way to tell if your charger is working unless you have a volt meter. If you suspect there is a problem with your charger, contact your local Power Wheels® authorized service center. They can test your charger for you.
	Wrong type or improperly installed fuse	Make sure that the batteries have properly installed Power Wheels® 30 amp fuses before charging. For best performance, do not use substitute parts.
	Blown fuse	Make sure that the fuses in the batteries are in good condition. Remove the fuses from the batteries and make sure they are not blown. Replace a blown fuse with a Power Wheels® 30 amp fuse. For best performance, do not use substitute parts.
	Loose wire or loose connectors	Check all wires and connectors. Make sure the battery connector is tightly plugged into the motor harness connector and that there are no loose wires around the motors.
	Dead batteries	If your batteries are old or if you have not followed Battery Care instructions, your batteries may be dead. If you are unsure whether or not the batteries are dead, you can have them tested at your local Power Wheels® authorized service center.
	Electrical switch damage	The electrical switches can become corroded due to exposure to water or moisture or can jam due to loose dirt, sand or gravel. Contact your local Power Wheels® authorized service center for diagnosis and repair.
	Motor damage	Contact your local Power Wheels® authorized service center for diagnosis and repair.

Problems and Solutions Guide

Problem	Possible Cause	Solution
Vehicle was running but suddenly stopped	Loose wire or loose connectors	Check all wires and connectors. Make sure the battery connector is tightly plugged into the motor harness connector and that there are no loose wires around the motors.
	Wrong type or improperly installed fuse	Make sure that the battery has properly installed Power Wheels® 30 amp fuses installed before charging. For best performance, do not use substitute parts.
	Blown fuse	Make sure that the fuses in the batteries are in good condition. Remove the fuse from the battery and make sure they are not blown. Replace a blown fuse with a Power Wheels® 30 amp fuse. For best performance, do not use substitute parts.
	Driving conditions are too stressful	Use only on gentle inclines or slopes of 10° or less. If the driving conditions are too stressful the fuses in the batteries may blow. Remove the fuses from the batteries to see if they have blown. Replace a blown fuse with a Power Wheels® 30 amp fuse. Adjust the driving conditions.
	Vehicle is overloaded	Make sure you do not overload the vehicle by allowing more than 2 riders at one time, by exceeding the 130 lbs. maximum weight capacity, or by towing objects behind the vehicle. If the vehicle is overloaded, the fuses in the batteries may blow. Remove the fuses from the batteries to see if they have blown. Replace a blown fuse with a Power Wheels® 30 amp fuse. Reduce the load on the vehicle.
Short run time (Less than 1 - 3 hours per charge)	Undercharged batteries	Charge the batteries. New batteries should have been charged for at least 18 hours before using the vehicle for the first time. After first-time use, recharge the batteries for at least 14 hours after each use. Never charge the batteries longer than 30 hours.
		Check all wires and connectors. Make sure the battery connector is tightly plugged into the charger connector and that the charger is plugged into the wall.
		Make sure power flow to the wall outlet is "ON".
	Overcharged batteries	Do not charge the batteries longer than 30 hours. If you suspect that your batteries are damaged as a result of overcharging, contact your local Power Wheels® authorized service center. They can test your batteries for you.
	Batteries are old and will not accept full charge	Even with proper care, a rechargeable battery does not last forever. Average battery life is 1 to 3 years depending on vehicle use and use conditions. Replace the batteries with Power Wheels® Type H 6 volt batteries. For best performance, do not use substitute parts.
	Wrong type or improperly installed fuse	Make sure that the batteries have properly installed Power Wheels® 30 amp fuses before charging. For best performance, do not use substitute parts.
	Driving conditions are too stressful	Use only on gentle inclines or slopes of 10° or less. Extreme temperatures can also affect run time. If the driving conditions are too stressful the fuses in the batteries may blow. Remove the fuses from the batteries to see if they have blown. Replace a blown fuse with a Power Wheels® 30 amp fuse. Adjust the driving conditions.
	Vehicle is overloaded	Make sure you do not overload the vehicle by allowing more than 2 riders at one time, by exceeding the 130 lbs. maximum weight capacity, or by towing objects behind the vehicle. If the vehicle is overloaded, the fuses in the batteries may blow. Remove the fuses from the batteries to see if they have blown. Replace a blown fuse with a Power Wheels® 30 amp fuse. Reduce the load on the vehicle.

Problems and Solutions Guide

Problem	Possible Cause	Solution
Vehicle runs sluggishly	Undercharged batteries	Charge the batteries. New batteries should have been charged for at least 18 hours before using the vehicle for the first time. After first-time use, recharge the batteries for at least 14 hours after each use. Never charge the batteries longer than 30 hours.
		Check all connectors. Make sure the battery connector is tightly plugged into the charger connector and that the charger is plugged into the wall.
		Make sure power flow to the wall outlet is "ON".
	Batteries need charging	After approximately 3 hours of constant use, the batteries need charging.
	Wrong type or improperly installed fuses	Make sure that the batteries have properly installed Power Wheels® 30 amp fuses installed before charging. For best performance, do not use substitute parts.
	Batteries are old and will not accept full charge	Even with proper care, rechargeable batteries do not last forever. Average battery life is 1 to 3 years depending on the vehicle use and use conditions. Replace the batteries with Power Wheels® Type H 6 volt batteries. For best performance, do not use substitute parts.
	Vehicle is overloaded	Make sure you do not overload the vehicle by allowing more than 2 riders at one time, by exceeding the 130 lbs. maximum weight capacity, or by towing objects behind the vehicle. If the vehicle is overloaded, the fuses in the batteries may blow. Remove the fuses from the batteries to see if they have blown. Replace a blown fuse with a Power Wheels® 30 amp fuse. Reduce the load on the vehicle.
	Driving conditions are too stressful	Use only on gentle inclines or slopes of 10° or less. If the driving conditions are too stressful the fuses in the batteries may blow. Remove the fuses from the batteries to see if they have blown. Replace a blown fuse with a Power Wheels® 30 amp fuse. Adjust the driving conditions.
Vehicle runs in low speed, but does not run in high speed (Please Note: The vehicle is designed to operate in low speed only in reverse ( ).)	High speed lock-out not disconnected	The vehicle was pre-set to run only in low speed. To allow the vehicle to run in low and high speed, you must disconnect the High Speed Lock-Out. **Follow the instructions on page 22 to disconnect the High Speed Lock-Out.**
When the foot pedal is pressed, only one rear wheel spins	Operation of vehicle in low speed	It is possible that only one rear wheel may spin when both rear wheels are raised off the ground and the vehicle is in low speed. This does not necessarily indicate a problem. Check for proper operation of the drive system by raising the rear wheels off the ground and pressing the foot pedal. If only one rear wheel spins, carefully press your hand on the spinning wheel to slow it down. The other rear wheel should begin to spin. If the other rear wheel does not begin to spin, there may be a problem with the vehicle. Contact your local Power Wheels® authorized service center for diagnosis and repair.
Sometimes the vehicle doesn't run, but other times it does	Loose wire or connector	Check all wires around the motors and all connectors to make sure they are tight.
	Motor or electrical switch damage	Contact your local Power Wheels® authorized service center for diagnosis and repair.

Problems and Solutions Guide

Problem	Possible Cause	Solution
When the foot pedal is pressed, the vehicle won't run without a push	Loose wire or connector	Check all wires around the motors and all connectors to make sure they are tight.
	"Dead Spot" on motor	Contact your local Power Wheels® authorized service center for diagnosis and repair.
Vehicle constantly blows fuses	Wrong type of fuse used	Your vehicle requires Power Wheels® 30 amp fuses, one in each battery. Make sure the Power Wheels® 30 amp fuses are properly installed in the batteries. For best performance, do not use substitute parts.
	Child is switching speeds or between forward and reverse without stopping.	Teach your child to stop the vehicle before switching between speeds or switching direction.
Loud clacking or grinding noise from a motor-gearbox	Broken gears	Contact your local Power Wheels® authorized service center for diagnosis and repair.
Charger gets warm during use	It is normal for some chargers to get warm during use and is not reason for concern.	No action required.
		If your charger does not get warm during use, it does not mean that it is not working properly.
Batteries make a sizzling or gurgling noise when charging	It is normal for some batteries to make noise and swell slightly while charging and is not reason for concern.	No action required.
		If your batteries do not make noise or swell slightly during charging, it does not mean that they are not accepting the charge.

If, after reviewing the Problems and Solutions Guide, the vehicle still fails to operate, please contact your nearest authorized service center (see page 27) or contact Power Wheels® Consumer Affairs toll-free at **1-800-348-0751.**

Helpful Hint: For faster service when calling Consumer Affairs, completely charge the batteries before calling and have the following available by the phone:

- vehicle,
- vehicle model number (see sticker in battery compartment),
- vehicle production run number (see sticker in battery compartment),
- Phillips screwdriver, slotted screwdriver and needle-nose pliers with plastic or rubber handles,
- an extra Power Wheels® 30 amp fuse is helpful.

N Statement of Limited Warranty

90-day limited warranty for the Power Wheels® Ride-On Toy Vehicle

A 6-month battery warranty applying only to those 6 volt batteries which were included by Power Wheels®, with the Power Wheels® vehicle when originally purchased.

This limited warranty covers the Power Wheels® ride-on vehicle and the 6 volt batteries, purchased from Power Wheels® by the original purchaser, against defects in materials and workmanship.

This warranty covers normal use and does not cover the Power Wheels® vehicle or batteries if damaged by unreasonable use, neglect, accident, abuse, misuse, improper service or other causes not arising out of defects in materials or workmanship. Evidence of any attempt at consumer repair will void this warranty. This warranty does not cover, and is intended to exclude, any liability on the part of Power Wheels®, whether under this warranty or implied by law or any indirect or consequential damages for breach of warranty. Some states do not allow the exclusion or limitation so this limitation may not apply to you.

Should you need service or assistance with your vehicle during the warranty period, DO NOT RETURN THE VEHICLE TO THE STORE. Power Wheels® has provided a nationwide network of authorized service centers. Please refer to the list in this manual. Power Wheels® is continually expanding our Authorized Service Center Network. If there is not an authorized service center in your area, please call Consumer Affairs for information, **1-800-348-0751.**

This warranty gives you specific legal rights, and you may also have other rights which may vary from state to state.

PLEASE SAVE YOUR ORIGINAL SALES RECEIPT.

O Authorized Service Centers

We are continually expanding our Authorized Service Center Network. Please check this listing for the Authorized Service Center nearest you. If there is not one in your area, please call Power Wheels® Consumer Affairs at 1-800-348-0751.

ALABAMA

BIRMINGHAM - Frigid Service & Sales, 701 Graymont Ave. North, 35203, (205) 323-5831

BIRMINGHAM - Frigid Service & Sales, 1861 Centerpoint Rd., 35215, **(205)** 853-3952

BIRMINGHAM (HOMEWOOD) **-** D & R Appliance Company, 154 West Valley Ave., 35209, **(205)** 942-3959

DECATUR - Peddler II, 1000 B Beltline Road, 35603, **(205)** 350-1044

DOTHAN - Bill's Appliance Service, 208 Bic Road, P.O. Box 1192, 36303, **(334)** 792-7746

DOUGLAS - Brown Hardware, Highway 75, 35964, **(205)** 593-6086

HUNTSVILLE - C & G Appliance, 307 Jordan Lane, 35805, **(205)** 837-4551

MOBILE - Foster's Appliance Repair, 1660 South Beltline Highway, 36693, (334) 666-2670

MONTGOMERY - Acme Service Co., 2603 Highland Ave., 36107, **(334)** 264-2456

ALASKA

ANCHORAGE - Kam's Electronics Service, 360 E. Inter-national, Ste. B, 99518, **(907)** 562-3443

ARIZONA

GLENDALE - Elliott Electric Appliance Service, 6242 N. 43rd Avenue, 85301, **(602)** 937-2513

SCOTTSDALE - Elliott Electric, 7515 E. McDowell Road, 85257, **(602)** 946-7487

TUCSON - Arizona Small Appliance Service Co., 5033 E 5th Street, 85711, (520) 325-3988

ARKANSAS

FT. SMITH - Bromley Appliance Service, 614 North 10th Street, 72901, **(501)** 782-9646

HOT SPRINGS, The Battery Center, 400 Airport Road, 71913, (501) 624-7144

JONESBORO - Best Sewing & Vacuum & Repair, 2235 South Caraway Road, 72401, **(501)** 935-4739, (800) 844-4739

LITTLE ROCK - C & W Tool Repair, 1303 W. Markham, 72201, (501) 374-1911

MENA - Bearcat Starter & Alt., 902 Highway 71 South, 71953, (501) 394-0320

ROGERS - Kressel's Vacuum & Repair, 115 North 5th Street, 72756, **(501)** 636-7894

STUTTGART - Davis Lumber Company, 301 East Michigan, 72160, **(501)** 673-3601

CALIFORNIA

ANDERSON - Hardware Express/ Do It Best, 2681 Balls Ferry Road, 96007, (916) 365-3783

BAKERSFIELD - Southwest TV, 6300 White Lane, Suite B, 93309, **(805)** 397-4940

CONCORD - California Electric Service Center, 1170-G Burnett Avenue, 94520, **(510)** 827-1011

COVINA - California Electric Service Center, 612 Shoppers Lane, 91723, **(818)** 915-4935

DUBLIN - California Electric Service, 8947 San Ramon Road, 94568, (510) 551-3390

FONTANA - California Electric Service Center, 9794 Sierra Avenue, 92335, **(909)** 355-2500

FORT JONES - Ft. Jones Frontier Hardware, 11911 Main Street, 96032, **(916)** 468-2266

FRESNO - Valley Small Appliance, 4005 E. Ashlan Avenue, 93726, **(209)** 224-5530

FULLERTON - California Electric Service Center, 1208 E. Ash Avenue, 92631-5020, **(714)** 870-0900

LOS ALAMITOS - California Electric Service Center, 11284 Los Alamitos Blvd., 90720, **(562)** 430-2668

MERCED - Moosehead Electronics, 920 W. 18th Street, 95340, **(209)** 723-4712

MISSION VIEJO - California Electric Service Center, 23725 Via Fabricante, Unit B, 92691, **(714)** 586-9440

OAKLAND - California Electric Service Center, 1139 E. 12th Street, 94606, **(510)** 834-1050

OXNARD - Tiny's Inc., The Clean-up Store, 1237 Saviers Road, 93033, (805) 487-9401, (800) 845-3223

PASADENA - California Electric Service Center, 2594 E. Colorado Blvd., 91107, **(818)** 792-3194

SACRAMENTO - California Electric Service Center, 1821 "Q" Street, 95814, **(916)** 443-5711

SALINAS - SRS Hobbies, 1038A North Davis Road, 93907, (408) 424-4044

SAN CARLOS - California Electric Service Center, 990 Industrial Road, Suite 102, 94070, (415) 593-6696

SAN DIEGO - California Electric Service Center, 3430 El Cajon Blvd., 92104, **(619)** 283-6488

SAN FRANCISCO - California Electric Service Center, 1090 Bryant Street, 94103, **(415)** 431-8494

Authorized Service Centers

SAN JOSE - California Electric Service Center, 481 So. Bascom, 95126, **(408)** 295-1723

SANTA ANA - California Electric Service Center, 2025 South Main Street, 92707, **(714)** 641-0529

SANTA ROSA - Hardisty's Inc., 710 Farmers Lane, 95405, **(707)** 545-0535

STOCKTON - California Electronics, 929 North Yosemite Street, 95203, **(209)** 466-5432

TEMECULA - California Electric Service Center, 41715 Enterprise Circle North, Suite 101, 92590, **(909)** 695-5445

VAN NUYS - California Electric Service Center, 14753 Oxnard Blvd., 91411, **(818)** 997-8855

WEST LOS ANGELES - California Electric Service Center, 2314 S. Westwood Blvd., 90064, **(310)** 475-2532

YUCAIPA - Aire-Rite Heating & A/C, 34724 Yucaipa Blvd., 92399, **(909)** 797-2788

COLORADO

COLORADO SPRINGS - Nelson Appliance Repair, Inc., 1220 E. Fillmore, 80907, **(719)** 635-1928, (800) 291-8010

DENVER - Appliance Service, 4262 Lowell Blvd., 80211, **(303)** 458-1109, **(800)** 631-0941 (CO, WY only)

DENVER (ENGLEWOOD) - Appliance Service, 3932 S. Broadway, 80110, **(303)** 781-1227, **(800)** 553-1864

GRAND JUNCTION - V & L Appliance Service, 591 25 Road Suite A6, 81506, **(970)** 243-3360

CONNECTICUT

HARTFORD - Hartford Element & Appliance Service, 1500 Albany Avenue, 06112, **(860)** 246-7424, **(800)** 787-7977

NEW HAVEN (HAMDEN) - New Haven Appliance Service Center, 1627 Dixwell Avenue, 06514, **(203)** 288-6229

SHELTON - Jeff's Appliance, Inc., 500A Howe Avenue, 06484, **(203)** 924-8997

STAMFORD - Appliance Servicenter of Stamford, 15 Cedar Heights Road, 06905, **(203)** 322-7656

WATERBURY - P.J. Appliance Repair, 935 South Main Street, 06706, **(203)** 757-1014

DELAWARE

DOVER - Del-Mar Appliance of Delaware, 230 South Governors Avenue, 19904, **(302)** 674-2414, **(800)** 858-3424

WILMINGTON - Lyons Hardware, Inc., 2021 Kirkwood Highway, 19805, **(302)** 995-1260

FLORIDA

ATLANTIC BEACH - First Coast Repair, 25 Seminole Road, 32233, **(904)** 246-4616

CAPE CORAL - Family Hardware/Do-It Express, 622 SE 47th Terrace, 33904, **(941)** 542-6365

DELRAY - Mister Fix It, 209 S.E. 2nd Avenue, 33483, **(561)** 243-9999

GAINESVILLE - Authorized Appliance Service Co., 2614 S.W. 34th Street, 32608, **(352)** 375-3886

HIALEAH - S-O Service Co., 925 Hialeah Drive, 33010, (305) 887-6275

HOLLY HILL - Ormond Element, 1668 Ridgewood Avenue, 32117, **(904)** 677-3497

JACKSONVILLE - Authorized Appliance Service Co., 6120-5 Powers Avenue, 32217, **(904)** 737-5312

LAKELAND - Electric Shaver & Small Appliance, 4243 S. Florida Avenue, 33813, **(941)** 644-4690

MIAMI - Goodman's Sales & Service, 13081 SW 133 Court, 33186, **(305)** 278-8822

NORTH FORT MYERS - Family Hardware,13817 N. Cleveland Ave., 33903, **(941)** 995-6161

NORTH PALM BEACH - Appliance Doctors, 450 Northlake Blvd., 33408, **(407)** 845-0377, FAX **(407)** 845-0378

OCALA, Vacuums, Inc., 3535 S.E. Maricamp Road, #103, 34471, **(904)** 694-2247

OCALA, Vacuums, Inc., 2461-A SW 27th Avenue, 34474, (352) 854-2247

ORLANDO - Pine Hills Appliance Svc. Co., 6100-4 W. Colonial Drive, 32808, **(407)** 299-1271

ORLANDO - Southern Electric Co., 510 N. Parramore Avenue, 32801, **(407)** 841-8824, **(800)** 940-8824

PANAMA CITY, Callaway Vacuum & Sewing, 221 N. Tyndall Prkwy., 32404, (904) 763-6333

PENSACOLA - Foster's Appliance Repair, 3836 N. Davis Highway, 32503, (904) 432-8853

POMPANO BEACH - Authorized Appliance Service Co., 2171 N. Dixie Highway, 33060, **(954)** 941-2038

POMPANO BEACH - Philips Consumer Electronics, 2099 W. Atlantic Blvd., 33069, **(954)** 978-0467

PORT ST. LUCIE - Hoppe's Authorized Vac & Appliance, 6735 S. Federal Way, 34592, **(561)** 464-0102

ROCKLEDGE - Neelco Do-It Center, 400 Barton Blvd., 32955, **(407)** 639-1400

SARASOTA - Sunray Small Appliances,8371 N. Tamiami, 34243, **(941)** 358-9999, **(800)** 895-5655

SEBRING - Sebring Do-It Center, 305 U.S. 27 North, 33870, **(941)** 385-2785

SPRING HILL - Crowder Bros Hardware, 5350 Spring Hill Dr., 34606, **(352)** 686-4743

ST. PETERSBURG - Keystone Electric, 4604 Central Avenue, 33711, **(813)** 321-1124

STUART - Appliance Doctors, 3166 S.E. Dixie Highway, 34997, (561) 287-6437

SUNRISE - Muller Appliance Service, 2620 N. University Drive, 33322, **(954)** 749-5460

TAMPA - Authorized Appliance Service Co., Dibbs Plaza, 4119 Gunn Hwy., Unit 8, 33624, (813) 968-6638

VENICE - Sunray South, 2143 South Tamiami Trail, 34293, **(941)** 493-1733

VERO BEACH - Hoppe's Authorized Vac & Appliance, 1872 Commerce Avenue, 32960, **(561)** 562-4466

WEST PALM BEACH - Satisfaction TV Video Service, Inc., 1980 S. Congress Avenue, 33406, (561) 439-3733

GEORGIA

ATLANTA - Georgia Service Center, 5366 Buford Hwy., 30340, (770) 455-1716, (800) 455-1715

ATLANTA (MARIETTA) - Philips Consumer Electronics, 200 N. Cobb Parkway, Bldg. #100, Suite 120, 30062, (770) 795-3085

AUGUSTA - A & A Appliance Parts & Service, 1708 Walton Way, 30904, (706) 733-5163

BRUNSWICK - Ross Hardware & Supply, 3711 Community Road, 31520, (912) 267-0771

COLUMBUS - Burrell's National Appliance Service, 1728 Warm Springs Road, 31904, (706) 327-0523

LOGANVILLE - Mm Mower Sales and Service, 6099C Hwy. 20, 30249, (770) 466-8111

SAVANNAH - Higgins Appliance Service, 3 West Victory Drive, 31405, (912) 233-8372

TIFTON - Western Auto, 354 S. Main St., 31794, **(912)** 382-5767

VALDOSTA - Harry E. Anderson, Inc. Western Auto, 204 Central Avenue, 31601, (912) 242-5945

HAWAII

HONOLULU - McCully Bicycle & Sporting Goods, 932 Hausten Street, 96826, **(808)** 946-1192

WAILUKU (MAUI) - Tom's Appliance Sales & Service, 891 Eha Street, 96793, **(808)** 244-6278

WAIPAHU - Waipahu Bicycle, 94-320 Depot Street, 96797, **(808)** 671-4091

IDAHO

BOISE - Boise Appliance, 1503 Main Street, 83702, **(208)** 343-0102

ILLINOIS

CHAMPAIGN - Appliance Parts & Service Center, 905 Francois, 61821, (217) 355-0220

CHICAGO (BERWYN) - Brand Service Center, 6739 West Cermak, 60402, **(708)** 749-4315

CHICAGO (DOWNER'S GROVE) - Authorized Appliance Service Co., 1644 W. Ogden Avenue, 60515, **(630)** 852-1550

CHICAGO (MORTON GROVE) - Brand Service Center, Inc., 5618 Dempster Street, 60053, **(847)** 965-5900

DECATUR - Rexx Battery of Decatur, Inc., 1330 East Eldorado, 62521, (217) 422-0281

JACKSONVILLE- Rexx Battery Specialists, 847 South Main Street, 62650, (217) 245-2713

NASHVILLE - Kesel Hardware,173 West St. Louis, 62263, **(618)** 327-8957

NILES - Household Appliance Sales & Serv., 7411 N. Milwaukee Ave., 60714, **(847)** 647-8250

PEORIA - Brand Service Center, 6926-I North University Street, Tanglewood Center, 61614, **(309)** 691-7588

ROCKFORD - Sun Appliance Sales & Service, 3112 N. Rockton Avenue, 61103, **(815)** 964-3866

SPRINGFIELD - Bannon Electronics,1224 N. Franklin, 62702, **(217)** 523-0313

WAUKEGAN - Brand Service Center, 2850 Belvidere Road, 60085, **(847)** 244-5800

INDIANA

EVANSVILLE - Electro Hygiene Co., 1614 South Kentucky, 47714, **(812)** 425-2671

FT. WAYNE - Don's Harware, 5701 Coventry Lane, in the Village of Coventry, 46804, **(219)** 436-2278

FT. WAYNE - Sun Appliance Service & Sales, 3523 N. Anthony Blvd., 46805, **(219)** 482-1702

INDIANAPOLIS - Brand Service Center, 1827 N. Meridian Street, 46202, **(317)** 924-1386

INDIANAPOLIS - Sullivan Hardware Do-It Center, 7021 N. Keystone, 46220, **(317)** 255-9230

NEW ALBANY - Wells Hardware, Inc., 1011 Vincennes Street, 47150, **(812)** 944-4523

SOUTH BEND - Ray's TV and Appliance, 60717 US 31 South, 46614, **(219)** 291-1630

SOUTH BEND (OSCEOLA) - AAA Appliance Service Co., 11868 Lincoln Way West, 46561, **(219)** 679-4981

TERRE HAUTE - Corey Electronics,1101 S. 8th Street, 47802, **(812)** 232-8786, **(888)** 232-8786

IOWA

BETTENDORF - K & K True Value Hardware, 1818 Grant Street, 52722, **(319)** 359-4473

CEDAR RAPIDS - Stalker Electric, Inc.,110 3rd Ave. SW, 52404, **(319)** 364-5646

DES MOINES - Quality Appliance Repair Center, 1417 Walnut Street, 50309, **(515)** 288-0108

DUBUQUE - Shaver's Plus, 1824 Central Avenue, 52001, **(319)** 556-4442

SIOUX CITY - Millard Television Inc., 1419 Hamilton Blvd., 51103, **(712)** 258-3435

Authorized Service Centers

KANSAS

COLBY - Gavon's Electronics, 1870 South Range, 67701, **(913)** 462-6601

JUNCTION CITY - R/C Hobbies, 115 W. 7th Street, 66441, **(913)** 238-1877

KANSAS CITY (OVERLAND PARK) - Mar-Beck Appliance Service Co., 8471 West 95th Street, 66212, **(913)** 642-1557

WICHITA - Alan Appliance Service, Inc., 1300 E. Central, 67214, **(316)** 262-7228, **(800)** 290-7228

KENTUCKY

GREENVILLE – Malone Lumber Do-It Center, 204 W. Depot Street, 42345, **(502)** 338-3252

LEXINGTON - Factory Electronics, 2422 Palumbo Drive, 40509, **(606)** 269-7341

LEXINGTON (VERSAILLES) - Deaver's Hardware, 221 N. Main St., 40383, **(606)** 873-7396

LOUISVILLE - Maury's Fluorescent & Appliance Service, 1521 Bardstown Road, 40205, **(502)** 456-1671

MADISONVILLE - Kuester's Hardware, N. Main St., Martin Mall, 42431, **(502)** 825-2818

MT. WASHINGTON - Mt. Washington Auto Supply, 520 N. Bardstown Rd, P.O. Box 316, 40047, 502) 538-4296

OWENSBORO - Kuester's Hardware, 1210 Carter Road, 42301, **(502)** 685-4916

PADUCAH - Hank Brothers True Value, 3101 Lone Oak Rd., 42003, **(502)** 554-4001

LOUISIANA

BATON ROUGE - Home Appliance Service, Inc., 10781 Florida Blvd., 70815, **(504)** 272-7727

HAMMOND - Battery Depot, 207 E. Thomas Street, 70401, (504) 542-4983

LAFAYETTE - Cullen's Playland, 4498 Johnston Street, 70503, **(318)** 981-2929

LAKE CHARLES - Capitol Schwinn Cyclery, 722 E. Prien Lake Road, 70605, **(318)** 474-9090

NEW ORLEANS (METAIRIE) - Le Jouet, Inc., 1700 Airline Hwy., 70001, **(504)** 837-0533

SHREVEPORT - Shreveport Shaver and Appliance, 9750 St. Vincent, Burt Kouns Ind. Loop, 71106, **(318)** 865-5088, **(800)** 349-7722

MAINE

BANGOR - Adco Surgical Supply Co., 1292 Hammond St., 04401, **(207)** 942-5273

GREENE - Brule's Auto Clinic & Sales, 968 Sawyer Road, 04236, (207) 375-4872

PORTLAND - Colonial Electronics, Inc., 259 St. John Street, 04102, **(207)** 774-6666

MARYLAND

BALTIMORE (ELLICOTT CITY) - Clark Do-It Center, 10325 Baltimore National Pk., 21042, **(410)** 313-8100

BALTIMORE (TOWSON) - Duran Service Company, 8741 Mylander Lane, 21286, **(410)** 321-9033

BERLIN - Myers Auto-Power Tool Rental Co., Inc.,10714 Ocean Gateway, 21811, (410) 641-3497

GAITHERSBURG - Waters Appliance Service, 216 E. Diamond Avenue, 20877, **(301)** 258-7500, (800) 225-5009

SALISBURY - Cycle and Sports Outlet, 2505 N. Salisbury Blvd., 21801, **(410)** 860-0400

TANEYTOWN - MacHenry Services, 68 Frederick Street, 21787, **(410)** 756-6659, **(800)** 276-1301

WASHINGTON D.C. (BELTSVILLE) - Philips Consumer Electronics, 10800 Rhode Island Avenue, 20705, **(301)** 595-5330, **(800)** 436-9647

MASSACHUSETTS

BOSTON (MEDFIELD) - Wills Hardware, 5 Janes Avenue, 02052, **(508)** 359-4381

BOSTON (WALTHAM) - Suburban Appliance Service Center, Inc., 271 Moody Street, 02154, **(617)** 893-6694

LOWELL - Lowell Appliance Service Center, Inc., 564 Dutton Street, 01854, (508) 454-8731

MAYNARD - Gramp's Garage, 16 Main Street, 01754, (508) 461-0463

QUINCY - Appliance Service and Parts, Inc., 582 Wash-ington Street, Route 3A, 02169, **(617)** 773-6656

SALEM - Fix Master, Inc., 190 North Street, 01970, **(508)** 745-0004

SPRINGFIELD - Utility Electric Service, Inc., 810 Main Street, 01101, **(413)** 781-1635

MICHIGAN

ALMONT - Almont Hardware, 4545 Van Dyke, P.O. Box 511, 48003, **(810)** 798-8922

BAY CITY - Bay Vac & Pedal, 805 Columbus Ave., 48708, **(517)** 892-7516

BRIGHTON - Complete Battery Source, 8023 W. Grand River, 48116, (810) 220-1050

DEARBORN - McNichols Electric Service, 1836 Grindley Park, 48124, **(313)** 563-7550

DETROIT - McNichols Electric Service, 13725 W. McNichols, 48235, **(313)** 342-6070, **(800)** 562-4226

DETROIT (ROYAL OAK) - McNichols Electric Service, 4115 West 13 Mile Road, 48072, **(810)** 288-5135

FLINT (DAVISON) - Gill-Roy's Hardware, 8405 East Davison, 48423, **(810)** 653-2288

FLINT (SWARTZ CREEK) - Gill-Roy's Hardware, 9061 Miller Road, 48473, **(810)** 635-2020

GRAND RAPIDS - Superior Appliance Service Co., 1050 Scribner Avenue, NW, 49504, **(616)** 459-3271

JACKSON - Hammond Hardware, 1800 Francis St., P.O. Box 7, 49204, **(517)** 782-0704

KALAMAZOO - Bill Coleman TV, 3938 S. Westnedge, 49008, **(616)** 344-1200

LANSING - Rapid Appliance Service, Inc., 1454 E. Michigan Avenue, 48912, **(517)** 485-1320

MIDLAND - Knopic's Do-It Center, 3128 Jefferson Ave., 48640, **(517)** 832-2774

PRUDENVILLE - Ford's Do-It Center, 841 W. Houghton Lake Drive, 48651, (517) 366-7622

TRAVERSE CITY - De Weese Hardware Inc., 1029 Carver Street, 49685, (616) 947-7670

MINNESOTA

BRAINERD - Diggz Motor Sports, 4299 Hwy. 371 North, 56401, (218) 828-8088

DULUTH - All Brand Mr. Fixit, 16 West First Street, 55802, (218)-722-1499

DULUTH - Mr. Fix it - Metro Appl. Service Center, Inc., 2020 W. Superior St., 55806, **(218)** 722-9063

MINNEAPOLIS (ST. LOUIS PARK) - Barness, 4631 Excelsior Blvd., 55416, **(612)** 926-0521

ROCHESTER - Robert's Electronics, 611 6th Ave. NW, 55901, **(507)** 282-2140

ST. PAUL - Barness, 1573 University Avenue, 55104, **(612)** 646-3109

MISSISSIPPI

HATTIESBURG - Champion Cycle & Fitness, 104 South 37th Avenue, 39401, **(601)** 264-8233

IUKA - W. H. Fairless Hardware Co., Inc., 117 Fulton Street, 38852, **(601)** 423-2233, (800) 797-9457

JACKSON (RIDGELAND) - Propeller Service, 291 Hwy. 51, Suite D6, 39157, **(601)** 856-3191

MERIDIAN - Broadmoor Home Center, 2420 Old North Hills Street, P.O. Box 3280, 39305, **(601)** 483-7373

NATCHEZ - Western Auto, 180 Seargent Prentiss Dr., 39120, **(601)** 445-4186

STARKVILLE - East Mississippi Lumber Co., 300 Russell Street, 39759, **(601)** 323-3554

MISSOURI

INDEPENDENCE - Mar-Beck Appliance Service Co., 4476 South Noland Road, 64055, **(816)** 478-1889

KANSAS CITY - Mar-Beck Appliance Service Co., 303 W. 79th Street, 64114, **(816)** 523-6931

KANSAS CITY (GLADSTONE) - Mar-Beck Appliance Serv. Co., 6559 N. Oak Traffic Way, 64118, **(816)** 436-9191

POPLAR BLUFF - Mills Iron & Supply, 1919 S. Westwood Blvd., 63901, (573) 785-2628

SPRINGFIELD - Mar-Beck Appliance Service Co., 2704 S. Glenstone Avenue, 65804, **(417)** 882-3070

ST. LOUIS - Authorized Appliance, Inc., 2355 Hampton Avenue, 63139, **(314)** 647-4250

ST. LOUIS - Brand Service Center, Inc., 1624 S. Broadway, 63104, **(314)** 231-0751

MONTANA

BILLINGS - Radio Equipment Company, 1120 16th Street West, 59104, (406) 256-9778, **(800)** 711-4024

NEBRASKA

GRAND ISLAND - Mundt's Small Appliance & Vacuum Repair, 1822 W. Northfront Street, 68803, **(308)** 382-5084

LINCOLN - CB Small Appliance, 432 South 11th Street, 68508, **(402)** 475-2546

LINCOLN - Sperry TV, 1115 North 47th St., 68503, **(402)** 464-9181

LINCOLN - Sperry TV, 2013 Highway 2, 68502, **(402)** 464-9181

NORTH PLATTE - Sperry TV, 1855 West A Street, Westfield Shopping Center, 69010, **(308)** 532-5200

OMAHA - Myers Electric Co., 7571 Dodge Street, 68114, **(402)** 393-8388, **(800)** 234-1414

OMAHA - Myers Electric Co., Inc., 1458 South 16th Street, 68108, **(402)** 342-7710

NEVADA

LAS VEGAS - Burney's Commercial Service, Inc., 4480 Aldebaran Avennue, 89103, (702) 736-0006

MINDEN - Valley Home & Sport Center, 1587 Highway 395, 89423, **(702)** 782-5111

NEW HAMPSHIRE

NEW JERSEY

EAST RUTHERFORD - Philips Consumer Electronics, 180 Manor Road, 07073, (201) 935-0600

HAWTHORNE - Ter Kuile, Inc., 206 Diamond Bridge Avenue, 07506, **(201)** 423-1142

HIGHLAND PARK - Dash Electronics, 10 N. 2nd Street, 08904, **(908)** 247-5124

HOWELL - South Jersey TV Service, Inc., 4232 Rt. 9 South, 07731, **(908)** 363-5550, **(800)** 244-3094

OCEAN - South Jersey TV Service, Inc., 1719 Route 35, 07712, **(908)** 531-3565

SICKLERVILLE - Sicklerville Hardware, 540 Williamstown Road, 08081, **(609)** 728-3800

Authorized Service Centers

TOMS RIVER - South Jersey TV Service, Inc., Stella Towne Center, 1258 Route 166, 08753, **(908)** 505-1771

TOTOWA - Philips Consumer Electronics, 140 J Commerce Way, 07512, (201) 890-0586

TRENTON - Tattersall, Inc., 309 N. Willow Street, 08618, **(609)** 393-4293

NEW MEXICO

ALBUQUERQUE - Appliance Service Center, 5505 Silver Avenue, SE, 87108, **(505)** 265-7774

CLOVIS - Burns Hardware, 1511 N. Prince, 88101, **(505)** 769-2528

NEW YORK

BAYSHORE, L.I. - Turnpike Appliance of Suffolk, Inc., 1253 Sunrise Highway, 11706, **(516)** 665-8311

BINGHAMTON - Hardware Fare DO-IT Center, 1139 Front Street, Nimmonsburg Square, 13905, **(607)** 722-9202

BUFFALO - Buffalo Appliance Repair Center, Inc., 20 Pannell Street, 14214, **(716)** 833-4677

BUFFALO (WILLIAMSVILLE) - Hector's Hardware, 876 Maple Road, 14221, **(716)** 688-4488

COMMACK, L.I. - Turnpike Appliance Service, 6181 Jericho Turnpike, 11725, **(516)** 499-3355

ELMIRA - Capabilities, Inc., 1149 Sullivan Street, 14901, **(607)** 734-2006

GREAT NECK - Turnpike Appliance Service Center, 45 Northern Boulevard, 11021, (516) 466-0644

HUDSON - Sweeps Vacuum & Repair Center, Inc., 705 Warren Street, 12534, **(518)** 828-5457

PEEKSKILL - Clark Appliance & Vacuum Service Corp., 950 Main Street, 10566, **(914)** 737-1368, **(800)** 765-0649

POUGHKEEPSIE - S & S Appliance Sales & Service, 390 Violet Avenue, 12601, **(914)** 452-6122

RICHMOND HILL - Lockdoctor Locksmiths, 104-37 Atlantic Ave., 11418 (718) 441-6242

ROCHESTER - Benfante Appliance Service, 1286 Mt. Hope Avenue, 14620, **(716)** 473-8765

SEA CLIFF, L.I. - Shabra Electronics, 400 Glen Cove Avenue, 11579, **(516)** 671-2218

STATEN ISLAND - Springstead Lumber 6232, 4255 Amboy Road, 10308, **(718)** 984-0300

SYRACUSE - County Wide Appliance, 1001 N. State Street, 13208, **(315)** 479-5253, **(800)** 333-3243

TUCKAHOE - Authorized Appliance of Westchester, 26 Columbus Ave., 10707, **(914)** 961-8011

UTICA - Oneida Bicycle & Sports Center, 2107 Whitesboro St., 13502, **(315)** 724-6084

WARWICK - Wadeson Home Center, 60 Forester Avenue, 10990, **(914)** 986-2215, **(800)** 982-2215 (NY only)

W. HEMPSTEAD L.I. - Turnpike Appliance Service, 86 Hempstead Turnpike, 11552, **(516)** 486-5700, **(800)** 628-3911

NORTH CAROLINA

ASHEVILLE - Skyland Hardware, 3179 Sweeten Creek Road, 28803, **(704)** 684-0308

CHARLOTTE - Authorized Appliance Servicenter, 1020 Tuckaseegee Road, 28208, **(704)** 377-4501, **(800)** 532-6127

CLINTON - Danny's Service Center, 119 Vance Street, 28328, (910) 592-3200

ELIZABETH CITY - Coastal Office Equipment Co., 501 East Church Street, 27909, (919) 335-2927

GREENSBORO - Greensboro Shaver & Appliance, 430 North Eugene Street, 27401, **(910)** 273-1065

HICKORY - First Flight Bicycles, 2435 N. Center Street, 28601, (704) 324-9350

RALEIGH - Authorized Appliance Service Center, 800 North Person Street, 27604, **(919)** 834-3476

STATESVILLE - First Flight Bicycles, 216 S. Center St., 28677, **(704)** 878-9683

WILMINGTON - American Tool & Tractor, 102 Eastwood Road, Ste. D-9, 28403, **(910)** 392-5784

WINSTON-SALEM - Authorized Appliance Servicenter, 904 South Marshall Street, 27117, **(910)** 725-5396

NORTH DAKOTA

FARGO - General Parts & Supply Co., 10 S. 18th Street, 58103, **(701)** 235-4161, **(800)** 279-9987

OHIO

AKRON - Advanced Appliance Service Company, 73 W. Exchange Street, 44308, **(330)** 762-8968

CANTON - Appliance Parts Co., 1267 Dueber Avenue, SW, 44706, **(330)** 453-8077

CINCINNATI - H&S Service, 458 Cincinnati Batavia Pike, 45244, **(513)** 528-0808

CINCINNATI (SILVERTON) - Brand Service Center, Inc., 6944 Plainfield Road, 45236, **(513)** 793-1170

CLEVELAND - Majors Appliance, 5845 Turney Road, 44125, **(216)** 663-4650

CLEVELAND (MENTOR) - Lake Erie Lawn & Garden, 7833 Munson Rd., 44060, **(216)** 257-9000

CLEVELAND (PARMA) - Majors Appliance, 5785 Ridge Road, 44129, **(216)** 884-7200

CLEVELAND (WESTLAKE) - Philips Consumer Electronics, 24090 Detroit Avenue, 44145, **(216)** 899-2040, **(800)** 331-7037

DAYTON - Layer Electric, 603 South Ludlow Street, 45402, **(937)** 224-9608

DAYTON (NEW CARLISLE) - Ballweg Do-It Center, 3300 South Dayton, Lakeview Rd., 45344, **(937)** 849-1306

LIMA - Crouse Lumber Do-It Center, 333 E. Market Street, 45801, **(419)** 229-9070, **(800)** 826-9663

NEW BOSTON - True Value Toy Town, Rt. 52 & 139, 45662, **(614)** 456-5704

STRYKER - Short's Hardware, 115 N. Depot Street, 43557, **(419)** 682-4231

TOLEDO - Broadway Sales and Appliance Repair, 1621 Broadway, 43609, **(419)** 241-9731, **(800)** 436-5415

YOUNGSTOWN - O'Connor's, 3224 Market Street, 44507, **(330)** 782-4705

OKLAHOMA

OKLAHOMA CITY - Brand Service Center, 538 N. Pennsylvania Avenue, 73107, **(405)** 235-0583

TULSA - H.L. Moss, Inc., 1714 E. 15th Street, 74104, **(918)** 744-1305, **(800)** 248-5948

OREGON

PORTLAND - Appliance Repair Central, 3203 N. E. Sandy Blvd., 97232, (503) 234-7339, (800) 588-7339

PENNSYLVANIA

ALTOONA - Frye's Sweeper & Sewing Center, Inc., 1400 Valley View Boulevard, 16602, **(814)** 943-5001, **(800)** 640-1308

HARRISBURG - C.H. Jaillant, Inc., 2301 North Seventh Street, 17110, (717) 233-3488, **(800)** 633-3488

JOHNSTOWN - Cambria True Value Hardware, West Hills Square, Goucher Street, 15905, **(814)** 255-4752

KINGSTON - Vac-Way Appliance & Service, 595 Market Street, 18704, (717) 288-4528

LITTLESTOWN - Machinery Services, 600 West King Street, 17340, (717) 359-8351

MOSCOW - Vac-Way Appliance & Service, RR #6 Box 6237, 18444, (717) 842-4669

ORANGEVILLE - Hess Do-It Center & Market, Route 487, Box 4 W, 17859, (717) 683-5192

PHILADELPHIA - Appliance Care/Service Corp., 6407 Rising Sun Ave., 19111, (215) 725-3112

PHILADELPHIA (COLLINGDALE) - J.F. Kenney Electric, 920 MacDade Boulevard, 19023, **(610)** 534-7373

PITTSBURGH - Ferry Electric Service Co., 7498 McKnight Road, 15237, **(412)** 364-3403

PITTSBURGH - Ferry Electric Service Co., 140 Clairton Blvd., 15236, **(412)** 653-6004

READING - Electric Repair Co., 502-504 North 9th Street, 19604, **(610)** 376-5444, **(800)** 422-8171 (PA only)

SCRANTON - Vac-Way Appliance and Service, 601 Cedar Avenue, 18505, **(717)** 343-1121

SHAMOKIN DAM - Willard Battery Outlet, 138 S. Old Trail, 17876, **(717)** 743-5383

TROY - Hoover Hardware, 9 Canton, 16947, **(800)** 251-2156, **(717)** 297-3445

WASHINGTON - Murphy Family Inc., 585 East National Pike, 15301, **(412)** 225-0324

WILKES-BARRE - Walter Hardware DO-IT Center, 57 N. Welles Street, 18702, **(717)** 823-1406

YORK - Parcel Plus, 2549 E. Market Street, York Market Place, 17402, **(717)** 757-1875

PUERTO RICO

GATINEAU - Les Equipements Brabant & Fils, 776B Blvd. Maloney, J8P 1G6, (819) 663-2526

HATILLO - Tropical Parts Service, P.O. Box 1335, Road 130 KM 8.5, 00659, **(787)** 898-6474

MAYAGUEZ - Cardona Appliance Service, 8 San Vicente Sreet, 00680, **(787)** 832-8366

MAYAGUEZ - Melendez Home Appliance Repair, Calle Post 319 Sur, 00680, **(787)** 832-5225

PONCE - Ferreteria Vivian, Centro Comercial, Los Caobos #7, 00731, (787) 840-0677

PUERTO NUEVO - Buckeye Service, 1013 Jesus T. Pinero Avenue, 00920, **(787)** 782-6175

RHODE ISLAND

PROVIDENCE - Marshall Electric Co., 200 Broad Street, 02903, **(401)** 331-4482

SOUTH CAROLINA

CHARLESTON HEIGHTS - Dorchester Electric Service, 3575 Dorchester Avenue, 29405, **(803)** 747-5221

COLUMBIA - Authorized Appliance Servicenter, 1811 Taylor Street, 29202, **(803)** 254-8414

DARLINGTON - Hobbies and More, 1570 South Main Street, 29532, (803) 393-0355, FAX (803) 393-8171

GREENWOOD - Bikes & Boards & Mopeds, 203A Montague Avenue, 29646, **(864)** 229-2453

SENECA - Seneca Micronics, 110 East North First, 29678, **(864)** 882-6593

SPARTANBURG - Boiling Springs Hardware, 3124 Boiling Springs Rd, 29303, **(864)** 578-1852

VARNVILLE - P&S Small Engine & Variety Shop, 105 Carolina Avenue, West, 29944, **(803)** 943-9141

TENNESSEE

CHATTANOOGA - Light Electric, 732 East 11th Street, 37403, **(615)** 267-9224

KNOXVILLE - Appliance & Electric Service Company, 4816-M Kingston Pike, 37919, **(423)** 588-5395, **(800)** 585-5395

KNOXVILLE - Authorized Appliance Service Center, 1206 North Central Street, 37917, **(423)** 524-3376

MEMPHIS - Camp Electric Co., 647 Madison Avenue, 38103, **(901)** 527-7543, **(800)** 238-7345

NASHVILLE - Webb's Appliance Service Center, Inc., 1519 Church Street, 37203, **(615)** 329-4079, **(800)** 899-4079

Authorized Service Centers

TEXAS

ABILENE - Metro Small Appliance Service Co., 141 S. Clyde, 79605, **(915)** 672-1853

AMARILLO - Reid's Appliance Service, Inc., 906 Georgia, 79102, **(806)** 373-8812

ANTHONY - Villarreal & Sons Elec., 512 S. Third Street, 79821, **(915)** 886-3362

AUSTIN - Harrell Supply and Service, Inc., 5435 Burnet Road, 78756, **(512)** 451-6464, **(800)** 332-7250 (TX only)

AUSTIN - Harrell Supply and Service, Inc., 1409 West Oltorf, 78704, **(512)** 442-5966

AUSTIN (ROUND ROCK) - Harrell Supply, 907c Interstate Highway 35, 78664, **(512)** 388-0866

CORPUS CHRISTI- Brand Appliance & Microwave, 2751 South Staples, 78404, **(512)** 854-1851

DALLAS - Pearsol Appliance Co., 3127 Main Street, 75226, (214) 939-0930

DALLAS - All Type Sales and Service Co., Inc., 2835 Irving Blvd., 75207, **(214)** 638-1170, **(800)** 717-1170

FT. WORTH - Ft. Worth Shaver and Appliance Center, 1012 West 7th Street, 76102, **(817)** 335-9970

HOUSTON - Brand Service Center, 5727 Richmond Avenue, 77057, **(713)** 782-8910

HOUSTON - Brand Service Center, 1970 FM 1960, 77090, **(713)** 537-7795

LAREDO - Rubio Electric, 1719 San Bernardo, 78040, **(210)** 722-3908

LONGVIEW - Toys and Things, 918 NW Loop 281, 75604, **(903)** 759-3939

LUBBOCK - Minter's, 4409 50th Street, 79414, **(806)** 799-3170

LUFKIN - STS Audio and Video, 1505 South First Street, 75901, **(409)** 639-4529

MC ALLEN - All-In-One Repair Shop, 2313 Lark Avenue, 78504, **(210)** 682-8858

MIDLAND - Midland Tool Specialty, 918 South Main, 79701, (915) 682-4647, (800) 499-0755

PASADENA - Larry's TV Service, 3520 Fairmont Parkway, 77504, **(713)** 998-0122, **(800)** 244-0281

ROMA - True Value Hardware, 1004 E. Highway 83, **(210)** 849-1322

SAN ANTONIO - Brand Service Center, 7065 San Pedro Avenue, 78216, **(210)** 344-8577

SEYMOUR - Western Auto, 211 N. Main Street, 76308, **(817)** 888-3980

TEMPLE - Master Tech Repairs, 2819 West Avenue North, 76504, **(817)** 773-8991

VICTORIA - Tom's Video Service, 211 East Anaqua, 77901, **(512)** 576-0664, **(800)** 433-0664

WICHITA FALLS - Burke's Appliance Service, 2410 10th Street, 76309, **(817)** 723-6211

UTAH

OREM - The Mending Shed, 1735 South State Street, 84058, **(801)** 225-8012, **(800)** 339-9297

SALT LAKE CITY - Appliance Service Center, Inc., 210 East 6th South, 84111, **(801)** 328-9703

VERMONT

RUTLAND - Appliance Service Center Ltd., 152 Woodstock Avenue, 05701, **(802)** 773-8917

VIRGINIA

FREDERICKSBURG - Logan Electric Service, Inc., 98 Industrial Drive, 22408, (540) 898-8873

HARRISONBURG (PENN LAIRD) - J.L. Maintenance & Repair, Inc., Route 2, Box 308, 22846, **(540)** 289-9844

NEWPORT NEWS - Commonwealth Electric Shaver Sales & Service, Inc., 10105 Jefferson Ave., 23605, **(757)** 595-6712

NORFOLK - Commonwealth Electric Shaver Sales & Service, Inc., 6612 E. Virginia Beach Blvd., 23502, **(804)** 461-4475

ROANOKE - Commonwealth Shaver & Appliance Service, 5524 Williamson Road, NW, 24012, **(540)**366-6038

SOUTH BOSTON - South Boston True Value, 307 Broad Street, 24592, (804)572-6666

VIENNA - Appliance Fix-It, 8455 Tyco Road, 22182, (703) 893-1234

WINCHESTER - Battery Mart of Winchester, Inc., 1 Battery Dr., 22601, **(703)** 655-0065

WOODBRIDGE - Baker's Appliance, 13314 Occoquan Road, 22191, **(703)** 490-5605

WASHINGTON

SEATTLE - Ajax Electric, 2911 First Avenue South, 98134, **(206)** 622-9945

SEATTLE (BELLEVUE) - Action Small Appliance Service, 1500 145th Place, SE, 98007, **(206)** 643-9806

SPOKANE - SPARCO, West 45 2nd Avenue, 99204, **(509)** 624-8965

SPOKANE - SPARCO, N. 1119 Pines Rd., 99206, **(509)** 922-9666

WEST VIRGINIA

BECKLEY - Jerry's Detectors, Vacuum & Appl. Svc., 411 Second Street. 25801, **(304)** 253-3521

CHARLESTON - Sneed's Vacuum & Sewing Center, 2614 7th Avenue, 25312, **(304)** 744-3670, **(800)** 245-8048 (WV only)

HARRISVILLE - Western Auto, 1107 E. Main St., 26362, **(304)** 643-2226

HUNTINGTON - Mike's Appliance and Service, 212 20th Street, 25703, **(304)** 522-0737

MARTINSBURG - Battery Mart, 1161-3 Winchester Avenue, 25401, **(304)** 267-7033, **(800)** 464-7918

WHEELING - Fast Service Center, 1058 Main Street, 26003, **(304)** 232-5561 **(800)** 874-4090

WISCONSIN

APPLETON - G/Tech Electric Tool & Housewares Service, 600 W. College Ave., 54911, **(414)** 739-6064, **(800)** 400-6064

GREENBAY - Kastle Carts, Inc., 2301 N.Irwin Ave., 54313, **(414)** 465-6121

LACROSSE - Paul's Shaver Service, 1224 Caledonia Street, 54603, **(608)** 782-6291

MADISON (MONONA) - Kiefer's Shaver and Appliance, 4511 Monona Drive, 53716, **(608)** 221-3322

MAUMETTE - Della Do-It Center, W 1536 Highway 41, 54143, (715) 732-1768

MILWAUKEE - Brand Appliance Repair, Inc., 3707 North 92nd Street, 53222, **(414)** 461-0440

MILWAUKEE - Brand Appliance Repair, Inc., 6000 W. Oklahoma Street, 53219, **(414)** 541-4340

POWER WHEELS by Fisher-Price®

Do Not Return Your Vehicle to the Store

If you are missing parts or need assistance, please call us toll-free:

Power Wheels Consumer Affairs

1-800-348-0751

8 AM - 6 PM EST, Monday through Friday

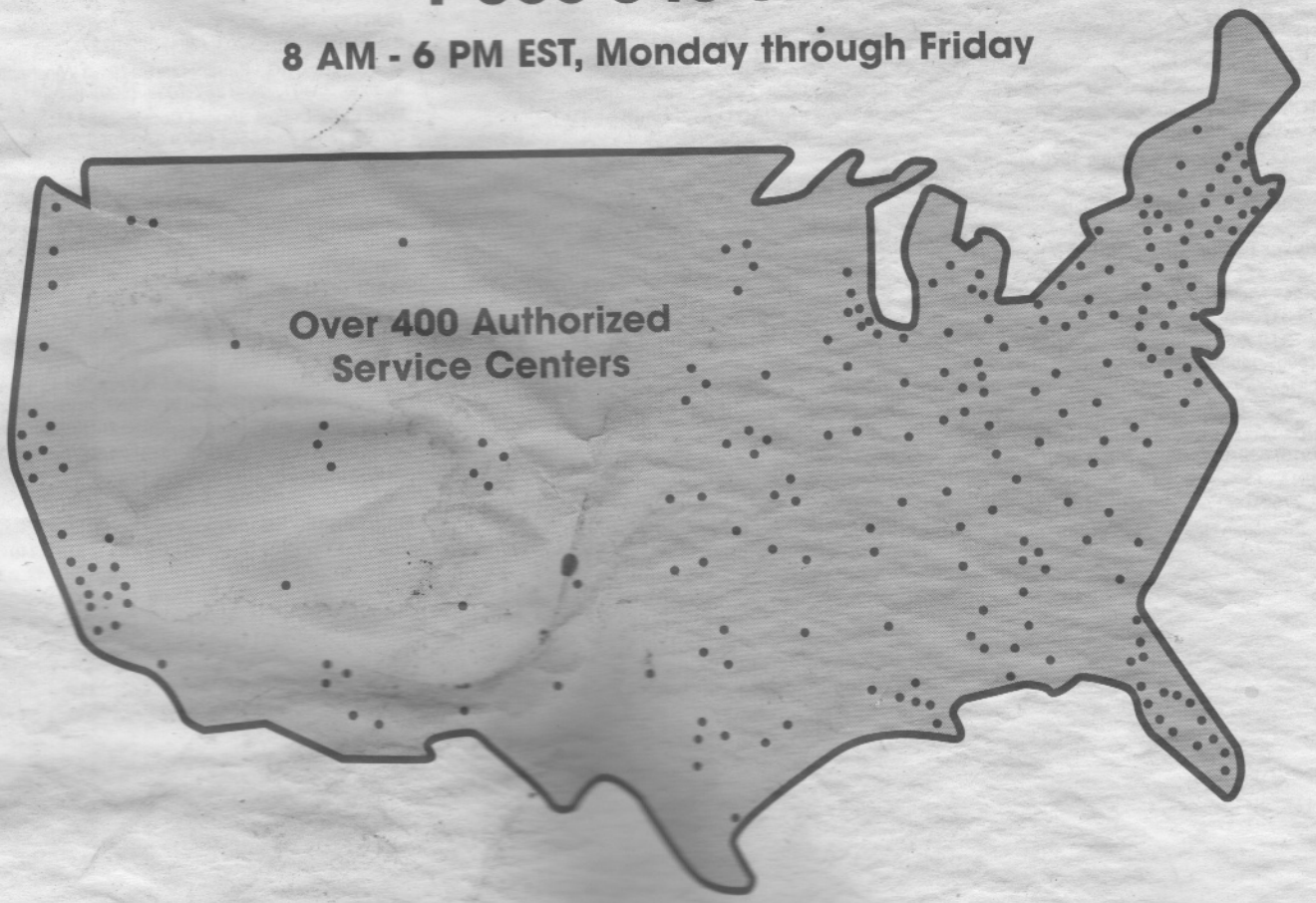

Or contact your local Power Wheels® Authorized Service Center.

For the location nearest you, refer to the Authorized Service Center list in this manual.

JEEP and the Jeep grille design are registered trademarks of Chrysler Corporation U.S.A. used under license.
©CHRYSLER CORPORATION 1998
Goodyear (and winged foot design and Wrangler for tires) are trademarks of The Goodyear Tire & Rubber Company, used with permission.

©1998 Fisher-Price, Inc., a subsidiary of Mattel, Inc., East Aurora, New York 14052 - All Rights Reserved

78538 1 78538-0920

Printed in the U.S.A.